PMS-LTD-145LR/G/B/W

Compact Parallel Illumination

PMS-LTD-145LR/G/B/W compact parallel illumination. Beam diameter: 145mm. Folded parallel backlights for telecentric inspection where installation space is limited.

Model specifications	
Beam diameter	145mm
Working distance	100-300mm
Length	325mm
Width	358mm
Thickness	176mm
Forward voltage	3.5V
Forward current	350mA
Available colors	Red / Green / Blue / White

Specification notes

The series introduction says 35–265 mm aperture; the model table specifies 30–265 mm beam diameter. The model-specific table values are retained.

The compact-parallel mechanical table and labeled drawings contain different dimensions. The table values are retained as published; confirm the installation envelope against the selected model drawing.
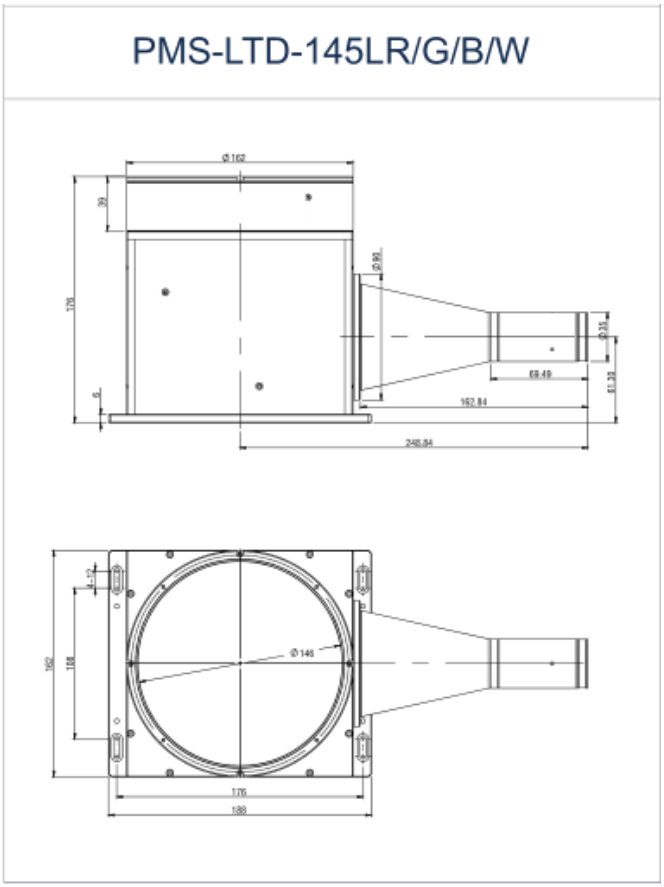
PMS-LTD-145LR/G/B/W dimension drawing (mm)