PMS-BHL-100X100R/W/B

Parallel Flat Illumination

PMS-BHL-100X100R/W/B parallel flat illumination. Luminous area: 100mm×100mm. Directional flat backlighting for contours, dimensions and defects in transparent objects.

Model specifications	
Luminous area	100mm×100mm
Available colors	Red / White / Blue

Published color configurations

Color	Voltage	Power	Wavelength / CT
Red	24V	Not established (source entry: 24V)	625nm
White	24V	Not established (source entry: 24V)	6500K
Blue	24V	Not established (source entry: 24V)	470nm

Series parameters	
Series spectral options	Red: 620–630 nm or 645–660 nm; green: 525 nm; blue: 470 nm; white: 6500 K; infrared: 850–950 nm; ultraviolet: 365–395 nm
Matching controller	PMS-DPI2404-4-RS232T
Operating temperature	0–40 °C
Operating humidity	20–85% RH, non-condensing
Accessories	Diffusion plate (standard on some models); extension cable: 1, 3 or 5 m; standard cable length: 0.5 m
Expected service life	White light: more than 30,000 h at 25 °C and 50% brightness, to 50% attenuation
Customization	Object characteristics, working distance, irradiation angle, color and field of view can be specified on request

Specification notes

The series spectral options describe the broader range. The model color configurations establish the options and ratings published for this model.

The source model table prints “24V” in the Power column for every color. This is retained as a source entry, but does not establish a wattage rating.
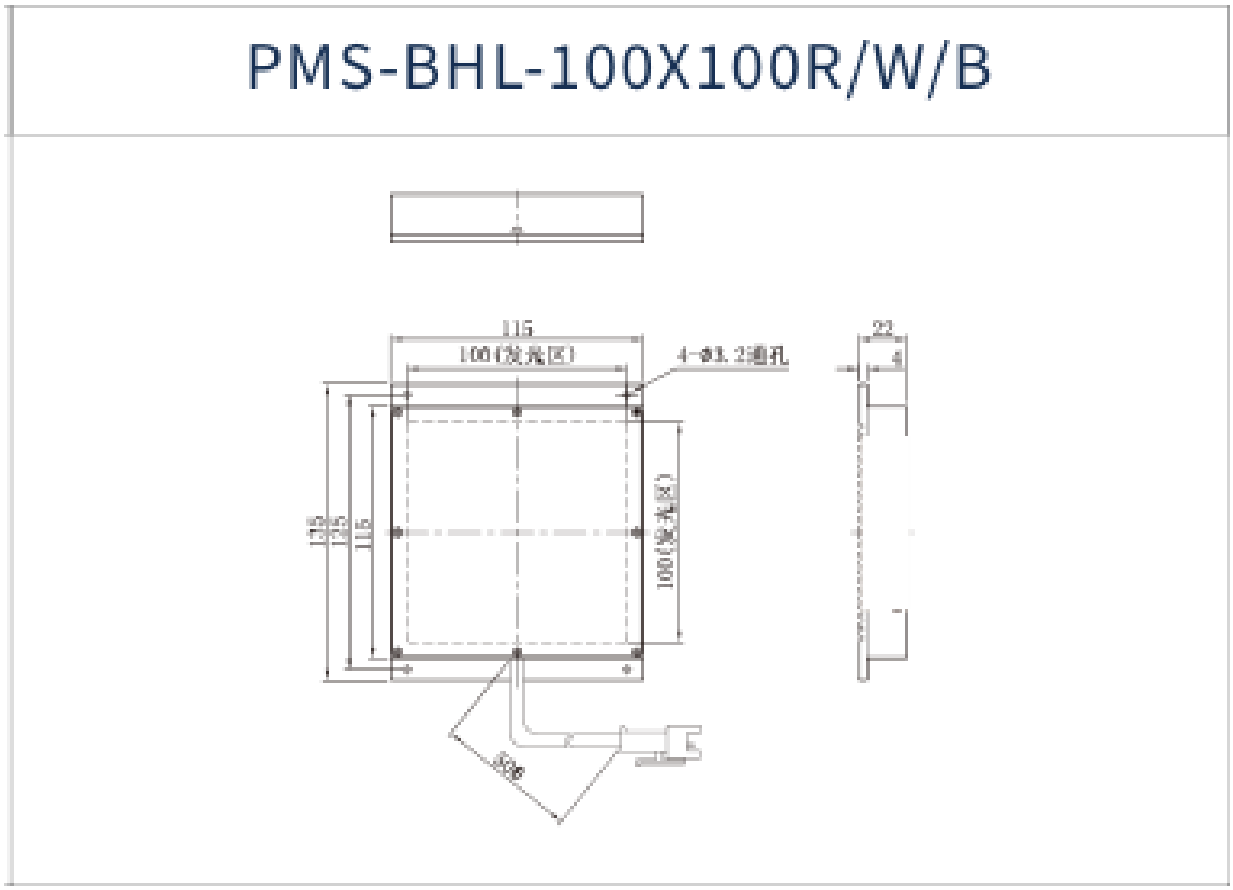
PMS-BHL-100X100R/W/B dimension drawing (mm)