PMS-GR-70-H15R/W/B

Dome Illumination

PMS-GR-70-H15R/W/B dome illumination. Diameter: φ70mm. Diffuse dome illumination for curved, reflective surfaces and surface-defect inspection.

Model specifications	
Outer diameter	φ70mm
Camera hole diameter	φ15mm
Available colors	Red / White / Blue

Published color configurations

Color	Voltage	Power	Wavelength / CT
Red	24V	0.8W	625nm
White	24V	2.6W	6500K
Blue	24V	2.6W	470nm

Series parameters	
Series spectral options	Red: 620–630 nm or 645–660 nm; green: 525 nm; blue: 470 nm; white: 6500 K; infrared: 850–950 nm; ultraviolet: 365–395 nm
Matching controller	PMS-DPI2404-4-RS232T
Operating temperature	0–40 °C
Operating humidity	20–85% RH, non-condensing
Accessories	Diffusion plate (standard on some models); extension cable: 1, 3 or 5 m; standard cable length: 0.5 m
Expected service life	White light: more than 30,000 h at 25 °C and 50% brightness, to 50% attenuation
Customization	Object characteristics, working distance, irradiation angle, color and field of view can be specified on request

Specification notes

The series spectral options describe the broader range. The model color configurations establish the options and ratings published for this model.
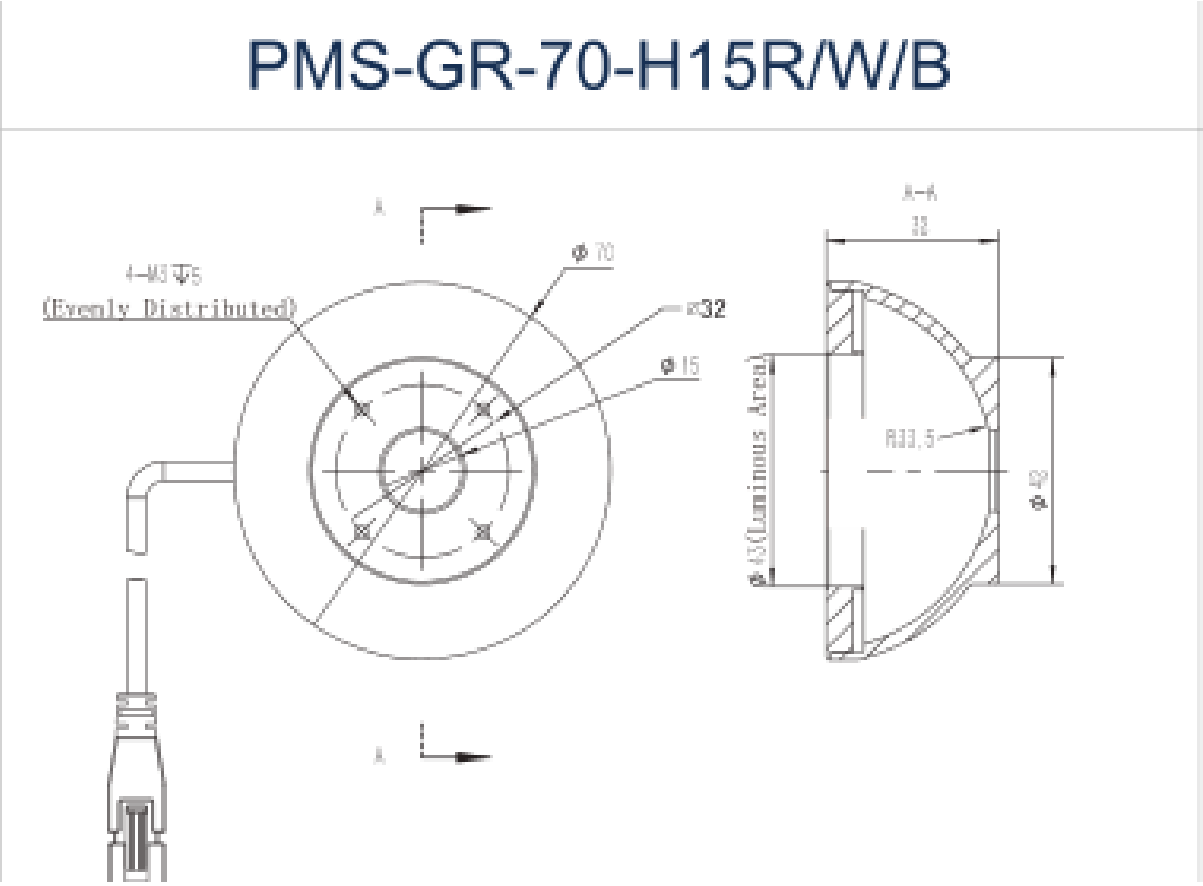
PMS-GR-70-H15R/W/B dimension drawing (mm)