# PMS-GCOL-40X40R/W/B

Coaxial Illumination

PMS-GCOL-40X40R/W/B coaxial illumination. Luminous area: 40mm × 40mm. On-axis lighting for reflective surfaces, laser markings and surface scratches.

| Model specifications | |
|---|---|
| **Luminous area** | 40mm × 40mm |
| **Available colors** | Red / White / Blue |

### Published color configurations

| Color | Voltage | Power | Wavelength / CT |
|---|---|---|---|
| **Red** | 24V | 2.0W | 625nm |
| **White** | 24V | 3W | 6500K |
| **Blue** | 24V | 3W | 470nm |

| Series parameters | |
|---|---|
| **Series spectral options** | Red: 620–630 nm or 645–660 nm; green: 525 nm; blue: 470 nm; white: 6500 K; infrared: 850–950 nm; ultraviolet: 365–395 nm |
| **Matching controller** | PMS-DPI2404-4-RS232T |
| **Operating temperature** | 0–40 °C |
| **Operating humidity** | 20–85% RH, non-condensing |
| **Accessories** | Diffusion plate (standard on some models); extension cable: 1, 3 or 5 m; standard cable length: 0.5 m |
| **Expected service life** | White light: more than 30,000 h at 25 °C and 50% brightness, to 50% attenuation |
| **Customization** | Object characteristics, working distance, irradiation angle, color and field of view can be specified on request |

## Specification notes

The series spectral options describe the broader range. The model color configurations establish the options and ratings published for this model.
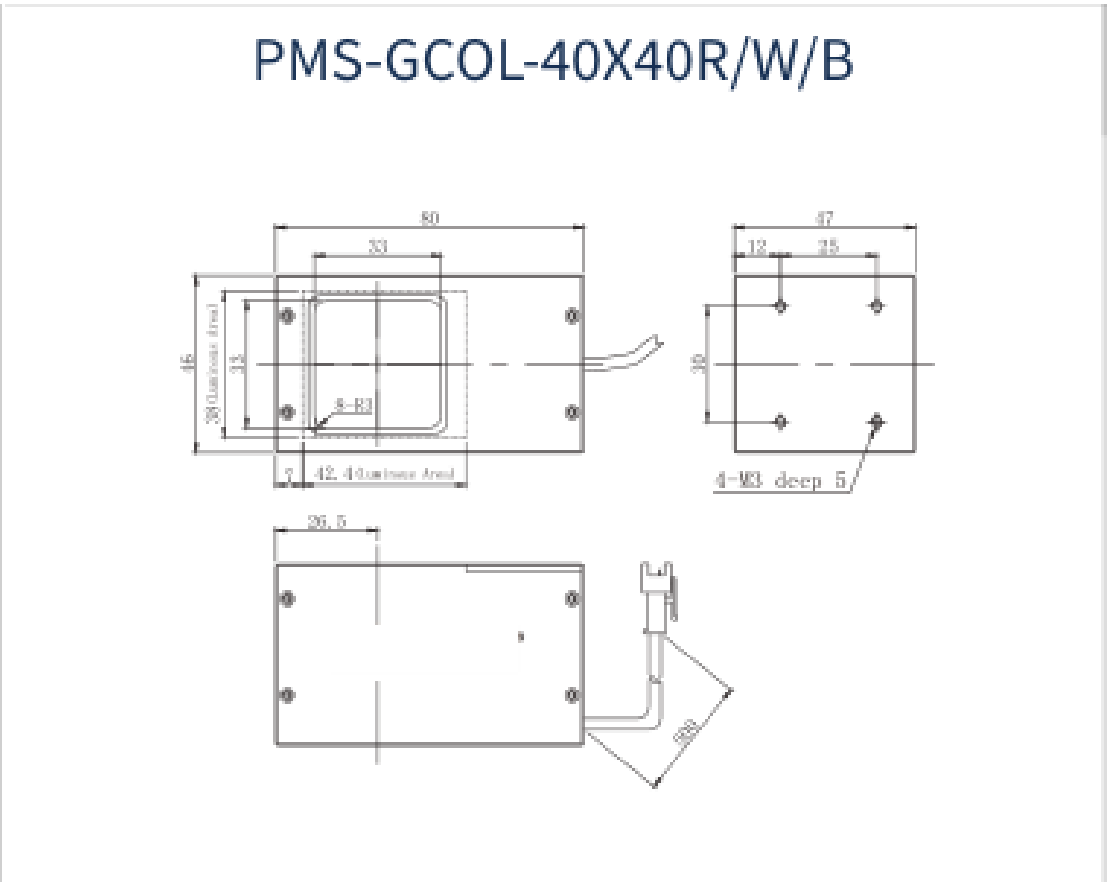
## PMS-GCOL-40X40R/W/B dimension drawing (mm)