PMS-GBRL-300X34R/W/B

Bar Illumination

PMS-GBRL-300X34R/W/B bar illumination. Luminous area: 300mm × 34mm. Modular strip lighting with adjustable irradiation angles for larger inspection areas.

Model specifications	
Luminous area	300mm × 34mm
LED rows	6 rows
Option	Diffusion board
Housing length	310 mm (A + 10; A is luminous length)
Housing width	40 mm
Housing height	20 mm
Cable length	500 mm
Mounting threads	6 × M3, 4 mm depth
Available colors	Red / White / Blue

Published color configurations

Color	Voltage	Power	Wavelength / CT
Red	24V	9.6W	625nm
White	24V	14.4W	6500K
Blue	24V	14.4W	470nm

Series parameters	
Series spectral options	Red: 620–630 nm or 645–660 nm; green: 525 nm; blue: 470 nm; white: 6500 K; infrared: 850–950 nm; ultraviolet: 365–395 nm
Matching controller	PMS-DPI2404-4-RS232T
Operating temperature	0–40 °C
Operating humidity	20–85% RH, non-condensing
Accessories	Diffusion plate (standard on some models); extension cable: 1, 3 or 5 m; standard cable length: 0.5 m
Expected service life	White light: more than 30,000 h at 25 °C and 50% brightness, to 50% attenuation
Customization	Object characteristics, working distance, irradiation angle, color and field of view can be specified on request

Specification notes

The series spectral options describe the broader range. The model color configurations establish the options and ratings published for this model.

14 mm luminous-width bar series dimension drawing (mm); A is the model luminous length

PMS-14 Series

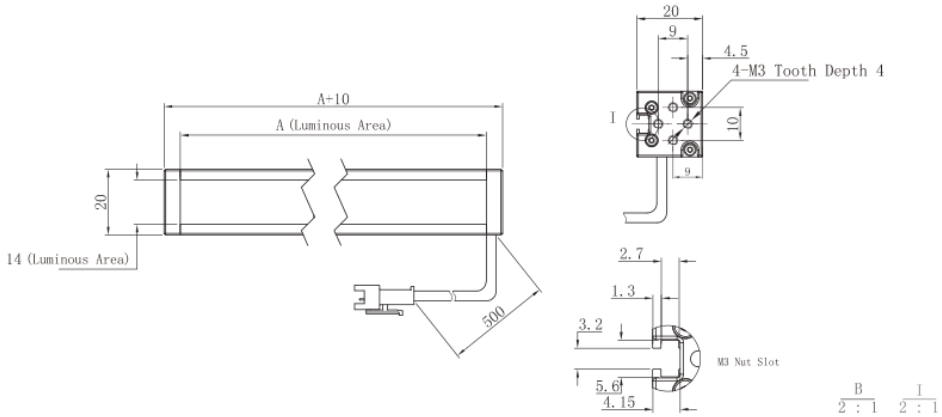

34 mm luminous-width bar series dimension drawing (mm); A is the model luminous length
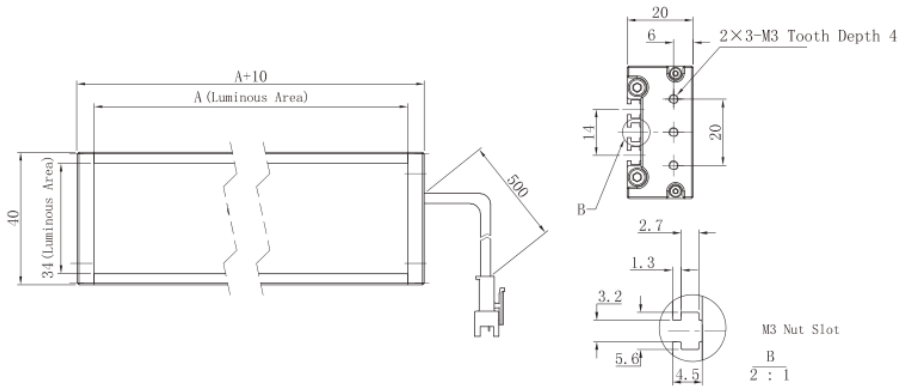
PMS-34 Series