# TS200-USB

USB power meters

TS200-USB laser power meter with a 0.5 W - 200 W measurement range and 0.19-25 µm spectral response. Read the model-specific attenuation, cooling and power-density conditions before selecting a configuration.



| Model specifications | Specification |
|---|---|
| **Model** | TS200-USB |
| **Power Range** | 0.5 W - 200 W |
| **Active Area Diameter** | 25 mm |
| **Probe Coating Film** | Broadband coating |
| **Probe Material** | Thermopile |
| **Wavelength Range** | 0.19-25 µm |
| **Max. Average Power Density** | 45 kW/cm$^2$ |
| **Max. Energy Density** | 0.3 J/cm$^2$,1064 nm,1 ns |
| **Sensitivity** | 0.01 W |
| **Measurement Uncertainty** | ±2% |
| **Response Time (0-90%)** | <1 sec. |
| **Linearity** | ±1% |
| **Resolution** | 0.01 W |
| **Accuracy** | <±2% |
| **Cooling Method** | Fan cooling |
| **Computer Interface** | USB 1.1 and USB 2.0 |
| **Temperature (Operating)** | 5°C - 45°C (41°F - 113°F) |
| **Temperature (Storage)** | -20°C - 70°C (-4°F - 158°F) |
| **Warranty Period** | 1 year |
| **Acquisition** | Single-channel or multi-channel power measurement |
| **Software** | PC measurement and display software |

# TS200-USB

Sensor, display and mechanical views

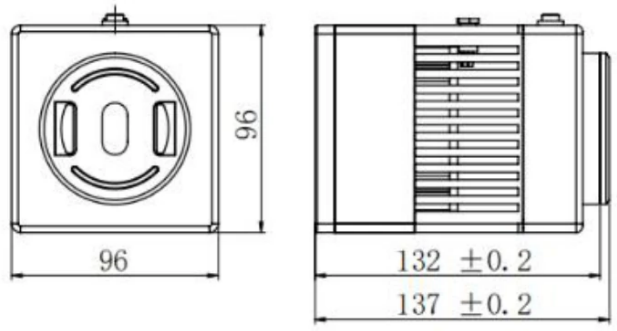


*Sensor and mounting dimensions (mm)*

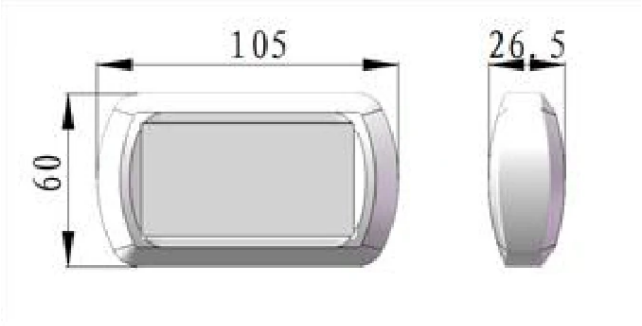


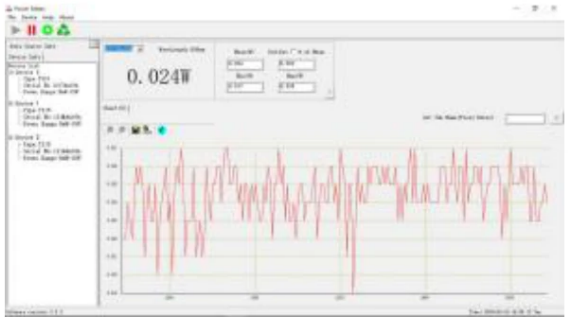


*USB display, dimensions (mm) and acquisition example*

## Measurement conditions

Keep total optical power and average power density within the stated limits. Check the beam spot size before measurement.

The pulse-energy-density limit applies only under the listed wavelength, pulse-duration and repetition-rate conditions. It is separate from the average-power-density limit.

*Specification review: 24 October 2026. Confirm the supplied sensor, attenuation, calibration, accessories and warranty terms with the quotation.*
**Precisometer** | info@precisometer.com | Product details and enquiry