TS15+TP100

TS thermopile power meters

TS15+TP100 laser power meter with a 2 mW - 15 W measurement range and 0.19-25 µm spectral response. Read the model-specific attenuation, cooling and power-density conditions before selecting a configuration.



Model specifications	Specification
Display unit	TP100
Sensor model	TS15
Power Range	2 mW - 15 W
Active Area Diameter	22 mm
Probe Coating Film	Broadband coating
Probe Material	Thermopile
Wavelength Range	0.19-25 µm
Max. Average Power Density	15 kW/cm^2
Max. Energy Density	0.15 J/cm^2,1064 nm,1 ns
Sensitivity	2 mW
Measurement Uncertainty	±2%
Response Time (0-90%)	<1 sec.
Linearity	±1%
Resolution	100 µW
Accuracy	<±2%
Power Supply	18650 (2 batteries)
Cooling Method	Air cooling
Computer Interface	USB 1.1 and USB 2.0
Instrument Power	100-240 V AC, 50/60 Hz, DC 12 V, 3.34 A
Temperature (Operating)	5°C - 45°C (41°F - 113°F)
Temperature (Storage)	-20°C - 70°C (-4°F - 158°F)
Warranty Period	1 year
Fibre connector	SMA905 / FC optional

TS15+TP100

Sensor, display and mechanical views

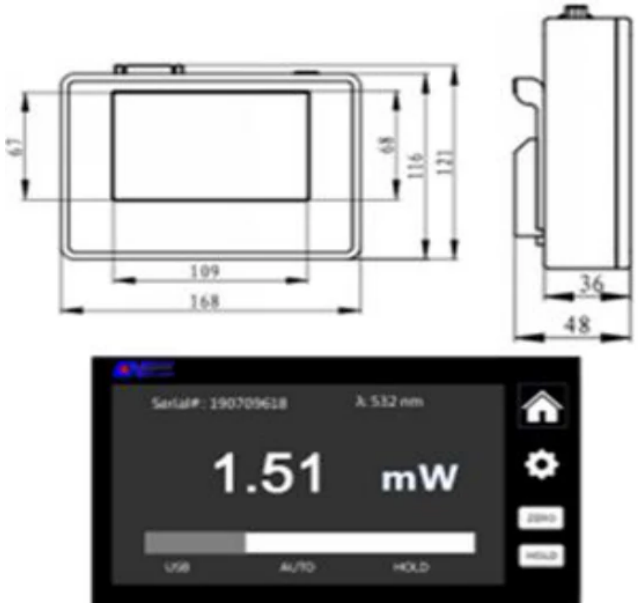

TP100 display and dimensions (mm)

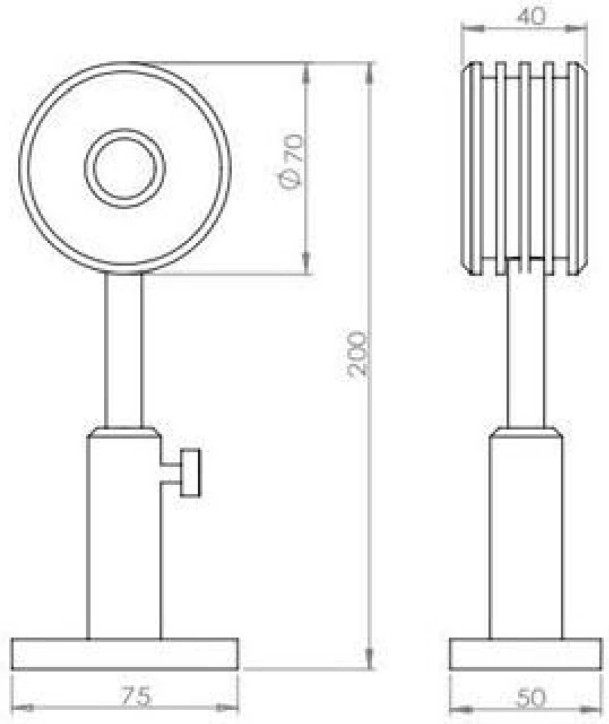

Sensor and mounting dimensions (mm)

Measurement conditions

Keep total optical power and average power density within the stated limits. Check the beam spot size before measurement.

The pulse-energy-density limit applies only under the listed wavelength, pulse-duration and repetition-rate conditions. It is separate from the average-power-density limit.

Specification review: 24 October 2026. Confirm the supplied sensor, attenuation, calibration, accessories and warranty terms with the quotation.

Precisometer | info@precisometer.com | Product details and enquiry