TS100+TP100

TS thermopile power meters

TS100+TP100 laser power meter with a 0.5 W - 100 W measurement range and 0.19-25 µm spectral response. Read the model-specific attenuation, cooling and power-density conditions before selecting a configuration.



Model specifications	Specification
Display unit	TP100
Sensor model	TS100
Power Range	0.5 W - 100 W
Active Area Diameter	25 mm
Probe Coating Film	Broadband coating
Probe Material	Thermopile
Wavelength Range	0.19-25 µm
Max. Average Power Density	45 kW/cm^2
Max. Energy Density	0.3 J/cm^2,1064 nm,1 ns
Sensitivity	0.01 W
Measurement Uncertainty	±2%
Response Time (0-90%)	<1 sec.
Linearity	±1%
Resolution	0.01 W
Accuracy	<±2%
Power Supply	18650 (2 batteries)
Cooling Method	Fan cooling
Computer Interface	USB 1.1 and USB 2.0
Instrument Power	100-240 V AC, 50/60 Hz, DC 12 V, 3.34 A
Temperature (Operating)	5°C - 45°C (41°F - 113°F)
Temperature (Storage)	-20°C - 70°C (-4°F - 158°F)
Warranty Period	1 year

TS100+TP100

Sensor, display and mechanical views

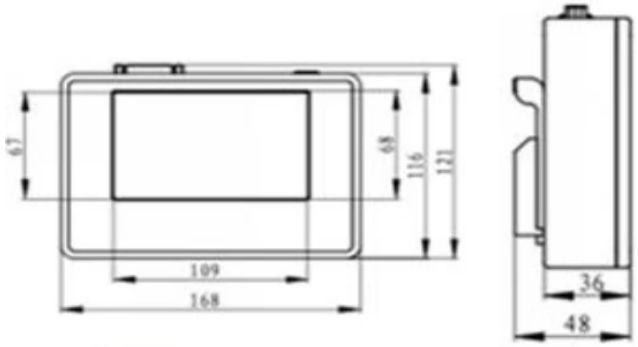

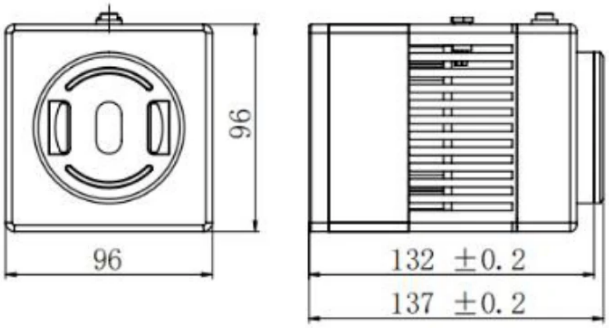

Sensor and mounting dimensions (mm)



TP100 display and dimensions (mm)

Measurement conditions

Keep total optical power and average power density within the stated limits. Check the beam spot size before measurement.

The pulse-energy-density limit applies only under the listed wavelength, pulse-duration and repetition-rate conditions. It is separate from the average-power-density limit.

Specification review: 24 October 2026. Confirm the supplied sensor, attenuation, calibration, accessories and warranty terms with the quotation.

Precisometer | info@precisometer.com | Product details and enquiry