TS100-40-USB

USB power meters

TS100-40-USB laser power meter with a 0.5 W - 100 W measurement range and 0.19-25 µm spectral response. Read the model-specific attenuation, cooling and power-density conditions before selecting a configuration.



Model specifications	Specification
Model	TS100-40-USB
Power Range	0.5 W - 100 W
Active Area Diameter	40 mm
Probe Coating Film	Broadband coating
Probe Material	Thermopile
Wavelength Range	0.19-25 µm
Max. Average Power Density	20 kW/cm^2
Max. Energy Density	0.3 J/cm^2,1064 nm,1 ns
Sensitivity	0.01 W
Measurement Uncertainty	±2%
Response Time (0-90%)	<7 sec.
Linearity	±1%
Resolution	0.01 W
Accuracy	<±2%
Cooling Method	Fan cooling
Computer Interface	USB 1.1 and USB 2.0
Temperature (Operating)	5°C - 45°C (41°F - 113°F)
Temperature (Storage)	-20°C - 70°C (-4°F - 158°F)
Warranty Period	1 year
Acquisition	Single-channel or multi-channel power measurement
Software	PC measurement and display software

TS100-40-USB

Sensor, display and mechanical views

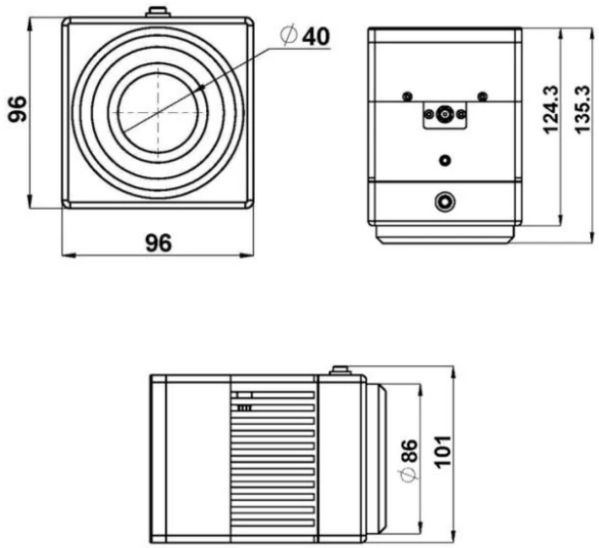

Sensor and mounting dimensions (mm)

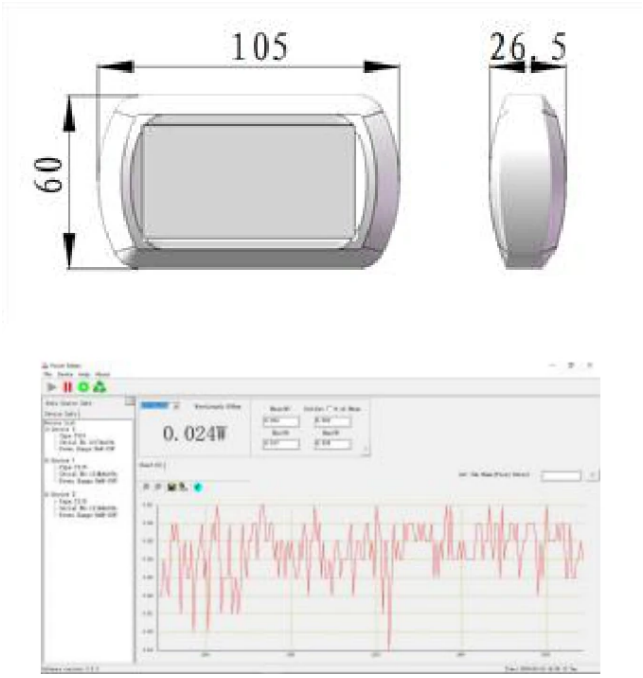

USB display, dimensions (mm) and acquisition example

Measurement conditions

Keep total optical power and average power density within the stated limits. Check the beam spot size before measurement.

The pulse-energy-density limit applies only under the listed wavelength, pulse-duration and repetition-rate conditions. It is separate from the average-power-density limit.

The model specification table gives a 40 mm active area; a feature summary gives a conflicting diameter. The model table is used here; confirm the supplied head before ordering.

Specification review: 24 October 2026. Confirm the supplied sensor, attenuation, calibration, accessories and warranty terms with the quotation.
Precisometer | info@precisometer.com | Product details and enquiry