PD5000-350+TP100

Integrating-sphere power meters

PD5000-350+TP100 laser power meter with a 1 µW - 5000 mW measurement range and 350-1100 nm spectral response. Read the model-specific attenuation, cooling and power-density conditions before selecting a configuration.



Model specifications	Specification
Display unit	TP100
Sensor model	PD5000-350
Power Range	1 µW - 5000 mW
Active area size	12 mm
Probe Material	Si
Wavelength Range	350-1100 nm
Measurement Uncertainty	±2%
Resolution	1 µW
Sensitivity	1 µW
Accuracy	<±2%
Power Supply	18650(2batteries)
Computer Interface	USB 1.1 and USB 2.0
Instrument Power	100-240 V AC, 50/60 Hz, DC 12 V, 3.34 A
Temperature (Operating)	5°C - 45°C (41°F - 113°F)
Temperature (Storage)	-20°C - 70°C (-4°F - 158°F)
Warranty Period	1 year
Fibre connector	SMA905 / FC optional

PD5000-350+TP100

Sensor, display and mechanical views

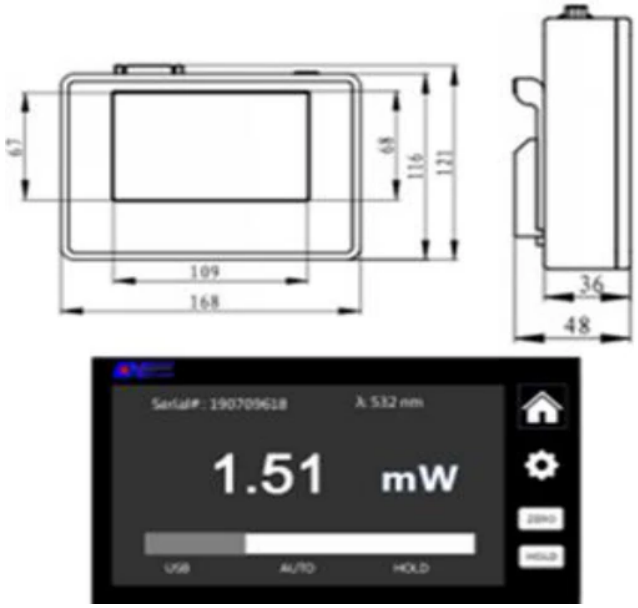

TP100 display and dimensions (mm)

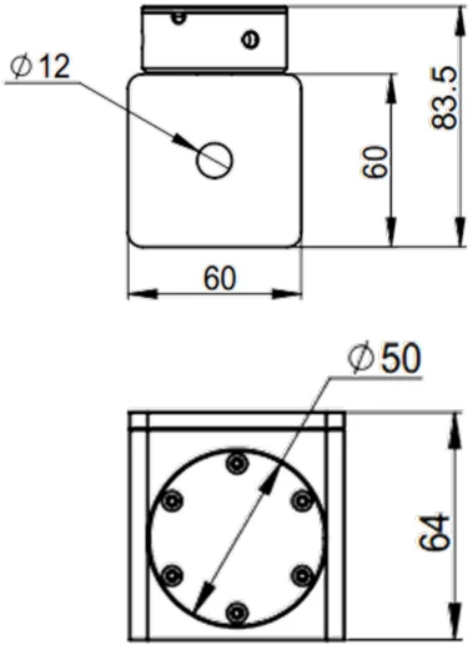

Sensor and mounting dimensions (mm)

Measurement conditions

Keep total optical power and average power density within the stated limits. Check the beam spot size before measurement.

Sensor damage caused by exceeding the listed measurement limits is excluded from the stated warranty. Confirm the supplied warranty terms with the quotation.

Specification review: 24 October 2026. Confirm the supplied sensor, attenuation, calibration, accessories and warranty terms with the quotation.
Precisometer | info@precisometer.com | Product details and enquiry