# PD20-200T+TP100

Photodiode power meters

PD20-200T+TP100 laser power meter with a 1 nW - 20 mW measurement range and 200-1100 nm spectral response. Read the model-specific attenuation, cooling and power-density conditions before selecting a configuration.




| Model specifications | Specification |
|---|---|
| **Display unit** | TP100 |
| **Sensor model** | PD20-200T |
| **Power Range** | 1 nW - 20 mW |
| **Active area size** | 10 × 10 mm |
| **Detector Material** | Si |
| **Wavelength Range** | 200-1100 nm |
| **Max. Power Density** | 1 W/cm$^2$ |
| **Measurement Uncertainty** | ±2% |
| **Resolution** | 1 nW |
| **Sensitivity** | 1 nW |
| **Accuracy** | <±2% |
| **Power Supply** | 18650 (2 batteries) |
| **Computer Interface** | USB 1.1 and USB 2.0 |
| **Instrument Power** | 100-240 V AC, 50/60 Hz, DC 12 V, 3.34 A |
| **Temperature (Operating)** | 5°C - 45°C (41°F - 113°F) |
| **Temperature (Storage)** | -20°C - 70°C (-4°F - 158°F) |
| **Warranty Period** | 1 year |
| **Probe thickness** | 6 mm |

# PD20-200T+TP100

Sensor, display and mechanical views

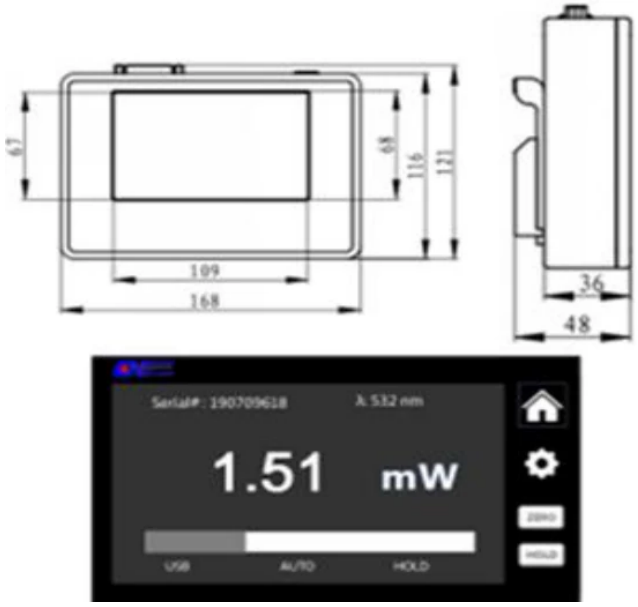


*TP100 display and dimensions (mm)*

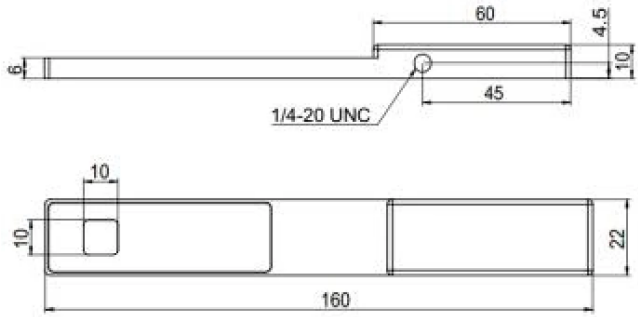


*Sensor and mounting dimensions (mm)*

## Measurement conditions

Keep total optical power and average power density within the stated limits. Check the beam spot size before measurement.

*Specification review: 24 October 2026. Confirm the supplied sensor, attenuation, calibration, accessories and warranty terms with the quotation.*

**Precisometer** | info@precisometer.com | Product details and enquiry