PD1000-800-TP100

Photodiode power meters

PD1000-800-TP100 laser power meter with a 1 µW - 1000 mW measurement range and 800-1800 nm spectral response. Read the model-specific attenuation, cooling and power-density conditions before selecting a configuration.



Model specifications	Specification
Display unit	TP100
Sensor model	PD1000-800
Max. Measurable Power (With Attenuator)	1000 mW
Max. Measurable Power (Without Attenuator)	10 mW
Min. Measurable Power	1 µW
Active Area Diameter	9.5 mm
Wavelength Range	800-1800 nm
Max. Power Density (With Attenuator)	20 W/cm^2
Max. Power Density (Without Attenuator)	1 W/cm^2
Measurement Uncertainty	±2%
Resolution	1 µW
Sensitivity	1 µW
Accuracy	<±2%
Power Supply	18650 (2 batteries)
Computer Interface	USB 1.1 and USB 2.0
Instrument Power	100-240 V AC, 50/60 Hz, DC 12 V, 3.34 A
Temperature (Operating)	5°C - 45°C (41°F - 113°F)
Temperature (Storage)	-20°C - 70°C (-4°F - 158°F)
Warranty Period	1 year
Fibre connector	SMA905 / FC optional

PD1000-800-TP100

Sensor, display and mechanical views

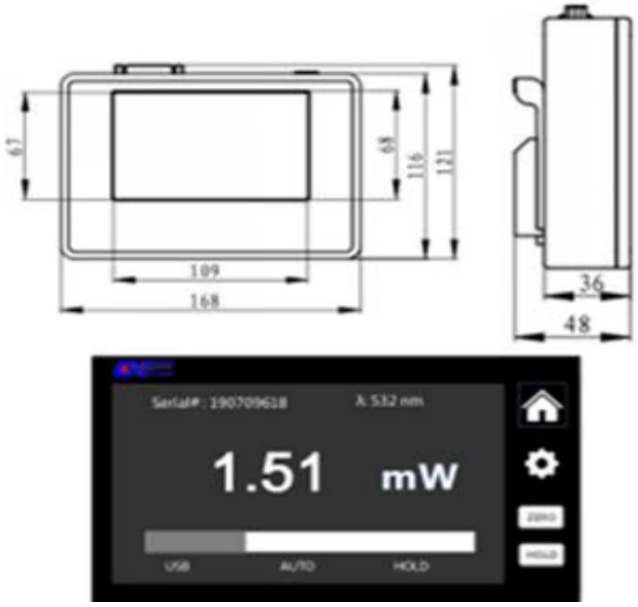

TP100 display and dimensions (mm)

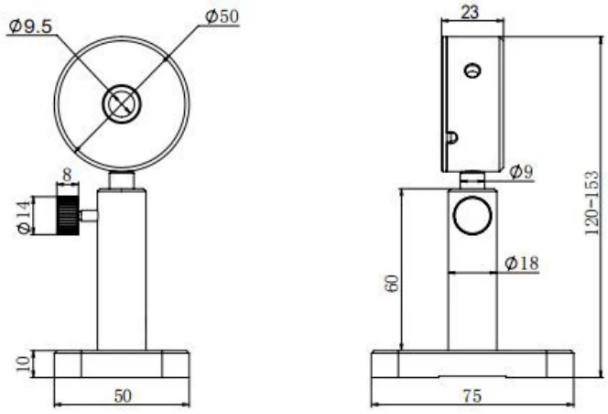

Sensor and mounting dimensions (mm)

Measurement conditions

Keep total optical power and average power density within the stated limits. Check the beam spot size before measurement.

The higher power rating requires the stated attenuator. Observe the separate limits for operation without attenuation; attenuation does not remove the power-density limit.

Sensor damage caused by exceeding the listed measurement limits is excluded from the stated warranty. Confirm the supplied warranty terms with the quotation.

Specification review: 24 October 2026. Confirm the supplied sensor, attenuation, calibration, accessories and warranty terms with the quotation.
Precisometer | info@precisometer.com | Product details and enquiry