PD1000-350T-USB

USB power meters

PD1000-350T-USB laser power meter with a 1 nW - 1000 mW measurement range and 350-1100 nm spectral response. Read the model-specific attenuation, cooling and power-density conditions before selecting a configuration.



Model specifications	Specification
Model	PD1000-350T-USB
Power Range	1 nW - 1000 mW
Max. Measurable Power (With Attenuator)	1000 mW
Max. Measurable Power (Without Attenuator)	10 mW
Min. Measurable Power	1 nW
Active area size	10 × 10 mm
Detector Material	Si
Wavelength Range	350-1100 nm
Max. Power Density (With Attenuator)	20 W/cm^2
Max. Power Density (Without Attenuator)	1 W/cm^2
Measurement Uncertainty	±2%
Resolution	1 nW
Sensitivity	1 nW
Accuracy	<±2%
Computer Interface	USB 1.1 and USB 2.0
Temperature (Operating)	5°C - 45°C (41°F - 113°F)
Temperature (Storage)	-20°C - 70°C (-4°F - 158°F)
Warranty Period	1 year
Acquisition	Single-channel or multi-channel power measurement
Software	PC measurement and display software

PD1000-350T-USB

Sensor, display and mechanical views

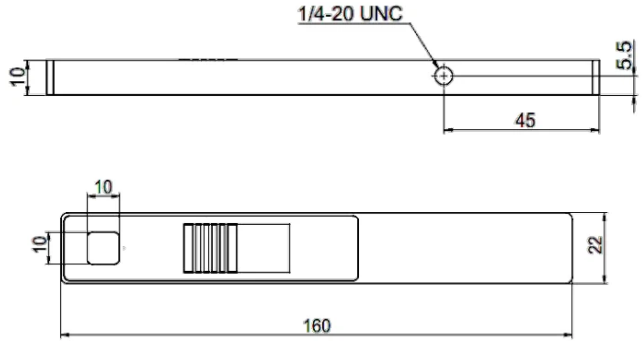

Sensor and mounting dimensions (mm)

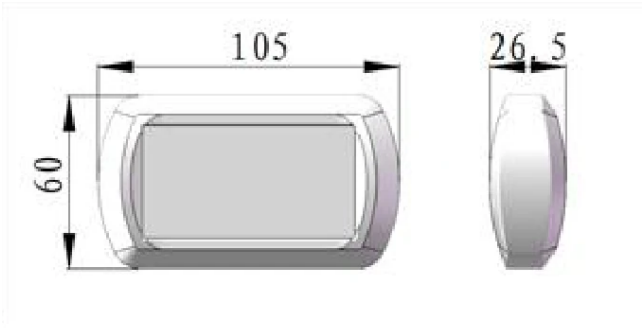

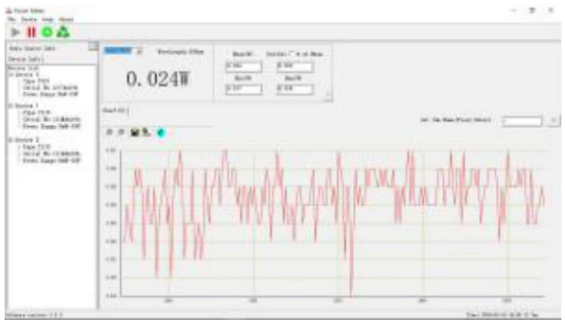

USB display, dimensions (mm) and acquisition example

Measurement conditions

Keep total optical power and average power density within the stated limits. Check the beam spot size before measurement.

The higher power rating requires the stated attenuator. Observe the separate limits for operation without attenuation; attenuation does not remove the power-density limit.

Sensor damage caused by exceeding the listed measurement limits is excluded from the stated warranty. Confirm the supplied warranty terms with the quotation.

Specification review: 24 October 2026. Confirm the supplied sensor, attenuation, calibration, accessories and warranty terms with the quotation.
Precisometer | info@precisometer.com | Product details and enquiry