HS1-USB

USB power meters

HS1-USB laser power meter with a 100 µW - 1 W measurement range and 0.19-20 µm spectral response. Read the model-specific attenuation, cooling and power-density conditions before selecting a configuration.



Model specifications	Specification
Model	HS1-USB
Power Range	100 µW - 1 W
Active Area Diameter	9 mm
Probe Coating Film	Broadband coating
Probe Material	Thermopile
Wavelength Range	0.19-20 µm
Max. Average Power Density	1.5 kW/cm^2
Max. Energy Density	0.3 J/cm^2(1 ns Pulse)
Sensitivity	100 µW
Measurement Uncertainty	±2%
Response Time (0-90%)	<1 sec.
Linearity	±0.2%
Resolution	10 µW
Sensitivity	100 µW
Accuracy	<±2%
Cooling Method	Air cooling
Computer Interface	USB 1.1 and USB 2.0
Temperature (Operating)	5°C - 45°C (41°F - 113°F)
Temperature (Storage)	-20°C - 70°C (-4°F - 158°F)
Warranty Period	1 year
Acquisition	Single-channel or multi-channel power measurement
Software	PC measurement and display software

HS1-USB

Sensor, display and mechanical views

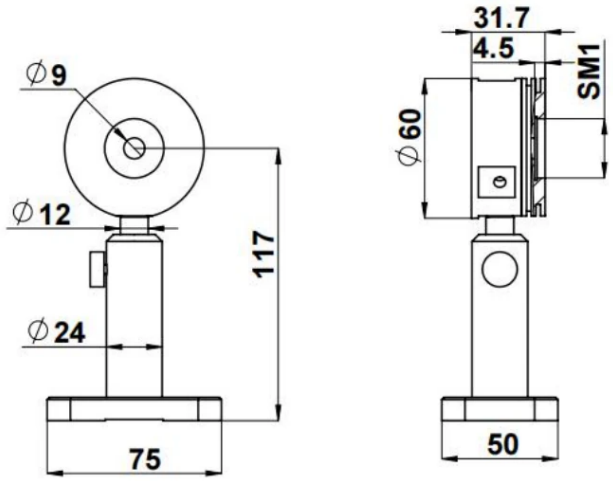

Sensor and mounting dimensions (mm)

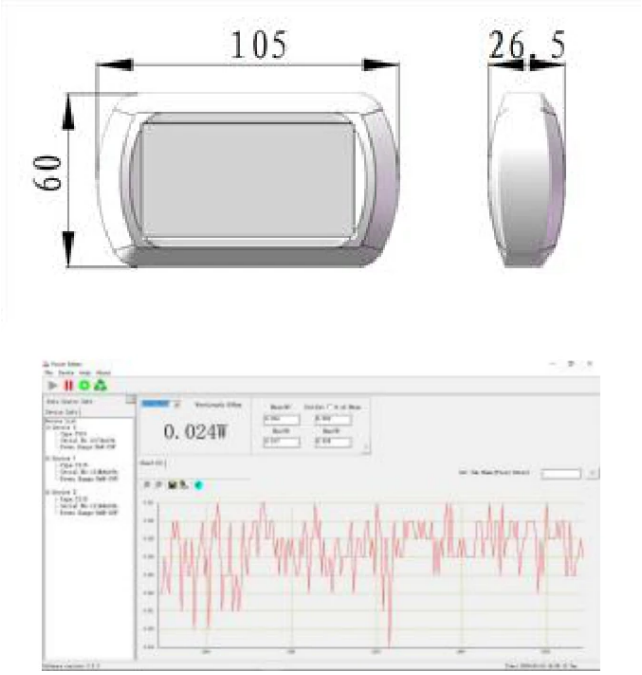

USB display, dimensions (mm) and acquisition example

Measurement conditions

Keep total optical power and average power density within the stated limits. Check the beam spot size before measurement.

The pulse-energy-density limit applies only under the listed wavelength, pulse-duration and repetition-rate conditions. It is separate from the average-power-density limit.

Specification review: 24 October 2026. Confirm the supplied sensor, attenuation, calibration, accessories and warranty terms with the quotation.
Precisometer | info@precisometer.com | Product details and enquiry