HP50

Handheld power meters

HP50 laser power meter with a 0.5 W - 50 W measurement range and 0.19-25 µm spectral response. Read the model-specific attenuation, cooling and power-density conditions before selecting a configuration.



Model specifications	Specification
Model	HP50
Power Range	0.5 W - 50 W
Active Area Diameter	25 mm
Wavelength Range	0.19-25 µm
Max. Power Density	40 kW/cm^2
Max. Energy Density	0.15 J/cm^2,1064 nm,1 ns
Measurement Uncertainty	±2%
Linearity	±1%
Resolution	100 mW
Sensitivity	500 mW
Accuracy	<±2%
Cooling Method	Air cooling
Temperature (Operating)	5°C-45°C(41°F-113°F)
Temperature (Storage)	-20°C-70°C(-4°F-158°F)
Warranty Period	1 year

HP50

Sensor, display and mechanical views

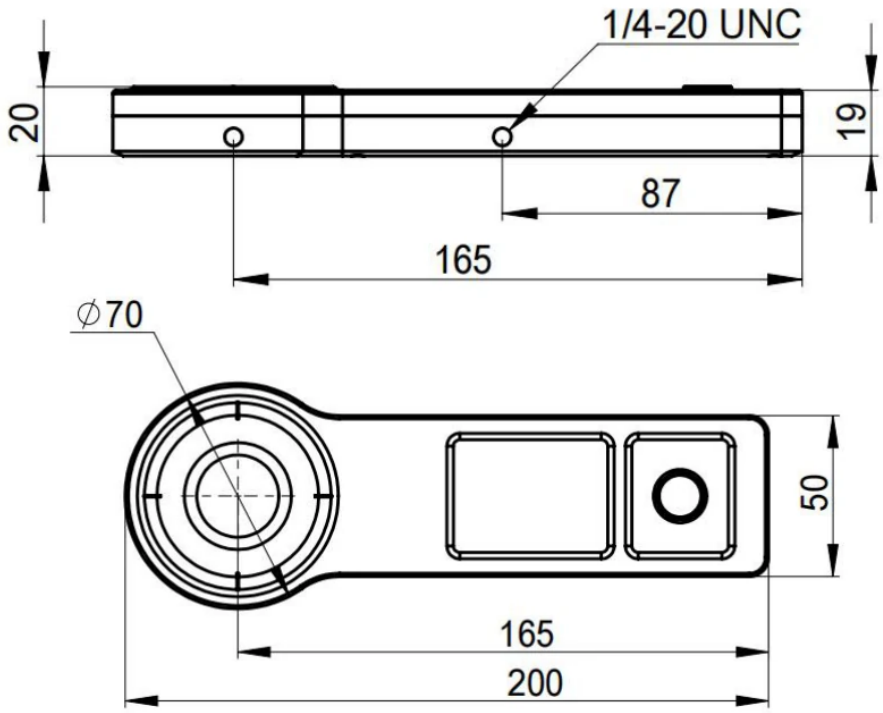

Mechanical outline and sensor dimensions (mm)

Measurement conditions

Keep total optical power and average power density within the stated limits. Check the beam spot size before measurement.

The pulse-energy-density limit applies only under the listed wavelength, pulse-duration and repetition-rate conditions. It is separate from the average-power-density limit.

Specification review: 24 October 2026. Confirm the supplied sensor, attenuation, calibration, accessories and warranty terms with the quotation.
Precisometer | info@precisometer.com | Product details and enquiry