HP2

Handheld power meters

HP2 laser power meter with a 10 mW - 2 W measurement range and 0.19-25 µm spectral response. Read the model-specific attenuation, cooling and power-density conditions before selecting a configuration.



Model specifications	Specification
Model	HP2
Power Range	10 mW - 2 W
Active Area Diameter	25 mm
Wavelength Range	0.19-25 µm
Max. Power Density	15 kW/cm^2
Max. Energy Density	0.15 J/cm^2,1064 nm,1 ns
Measurement Uncertainty	±2%
Linearity	±1%
Resolution	100 µW
Sensitivity	10 mW
Accuracy	<±2%
Cooling Method	Air cooling
Temperature (Operating)	5°C-45°C(41°F-113°F)
Temperature (Storage)	-20°C-70°C(-4°F-158°F)
Warranty Period	1 year

HP2

Sensor, display and mechanical views

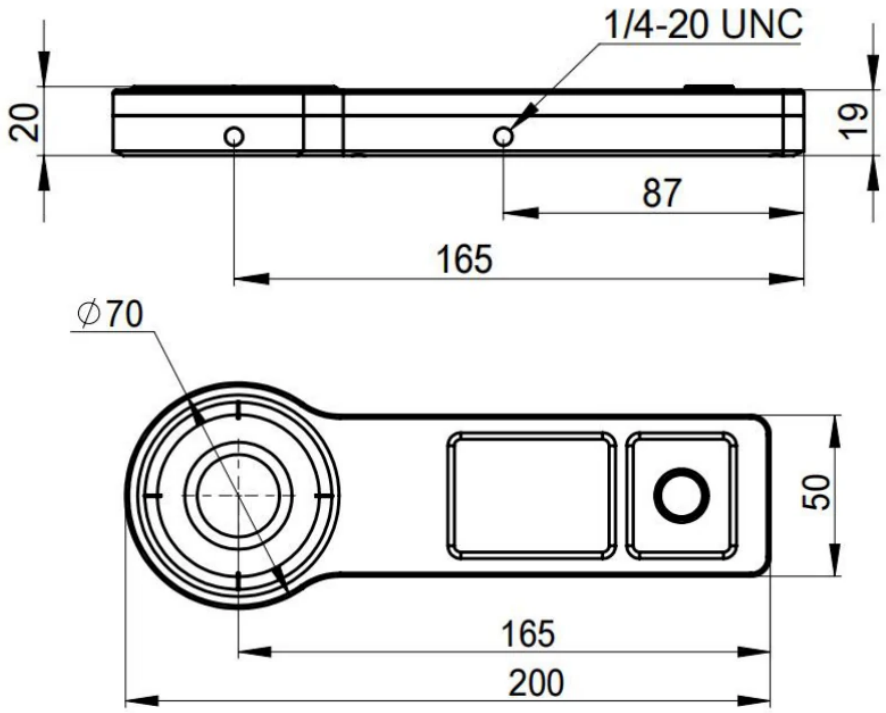

Mechanical outline and sensor dimensions (mm)

Measurement conditions

Keep total optical power and average power density within the stated limits. Check the beam spot size before measurement.

The pulse-energy-density limit applies only under the listed wavelength, pulse-duration and repetition-rate conditions. It is separate from the average-power-density limit.

The HP2 model document specifies 15 kW/cm^2 maximum power density. Use this model-specific limit rather than the higher value in the handheld-series overview.

Specification review: 24 October 2026. Confirm the supplied sensor, attenuation, calibration, accessories and warranty terms with the quotation.
Precisometer | info@precisometer.com | Product details and enquiry