Fiber Optical Isolator 400-780nm

(up to 5W CW)

DATASHEET



The OIUW Series fiber optical isolator is a passive device that guides lights in the forward direction while blocking light propagating in the reverse direction. The isolator uses special Faraday material to cover these shortwave bands. Our proprietary magnetic-optics technology and proven advanced micro-optics design perfected over 25 years features low insertion loss, high isolation, compact structure, high power handling, and high stability. The available configurations include polarization independence, polarization maintenance, multimode, 5W CW optical power handling, dual-stage high isolation, and integrated output power monitoring tap. The excellent characteristics of this product make it an ideal choice for applications where a high-performance isolator is needed. We also provide customized designs to meet special applications.

Features

- Low Insertion Loss
- High Isolation
- Low PDL
- High Stability
- High Reliability
- Cost Effective

Applications

- Laser
- Fiber Optic Sensor
- Test and Measurement
- Instrumentation

Specifications

Parameter		Min	Typical	Max	Unit
Center Wavelength		400		800	nm
Operating Wavelength Bandwidth			± 40		nm
Insertion Loss [1]			1	3.5	dB
Wavelength Dependent Loss				0.2	dB
Isolation	Singe Stage	22	27	30	dB
	Dual Stage	45	50	60	
Polarization Dependent Loss (SM)			0.1	0.2	dB
Polarization Extinction Ratio (PM) [2]		18		32	dB
Polarization Mode Dispersion				0.2	ps
Return Loss		50			dB
Optical Power Handling [3]			50		mW
Operating Temperature		-20	30	55	°C
Storage Temperature		-10		60	°C
Fiber Type		See order information			

Notes:

[1]. Excluding connectors. The loss is related to fiber core size, the smaller the high loss.

[2]. High extinction ratio require special order

[3]. The power handling is related to fiber core size. Smaller core has low optical power threshold.

Note: For a polarized input light version, the isolation is optimized to block the light reflection of the same polarization. Although lights of other polarizations may also be blocked, the extinction may be poor. PM isolators can be specially made to block backward propagating lights of all polarizations. PM isolators can also be made with a light polarizing function.

Legal notices: All product information is believed to be accurate and is subject to change without notice. Information contained herein shall legally bind Agiltron only if it is specifically incorporated into the terms and conditions of a sales agreement. Some specific combinations of options may not be available. The user assumes all risks and liability whatsoever in connection with the use of a product or its application.

Rev 05/01/24

© Photonwares Corporation P +1 781-935-1200 E sales@photonwares.com W www.agiltron.com

Information contained herein is deemed to be reliable and accurate as of the issue date. Photonwares reserves the right to change the design or specifications at any time without notice.
Agiltron is a registered trademark of Photonwares Corporation in the U.S. and other countries.

www.precisometer.com info@precisometer.com

Fiber Optical Isolator 400-780nm

(up to 5W CW)

DATASHEET

Typical Single Stage Isolator Wavelength Dependence

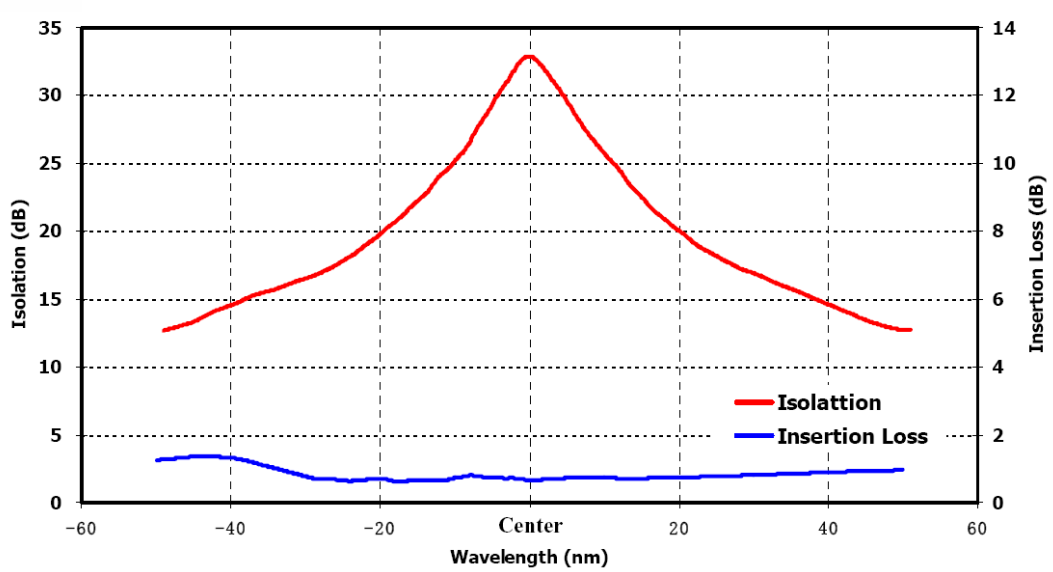

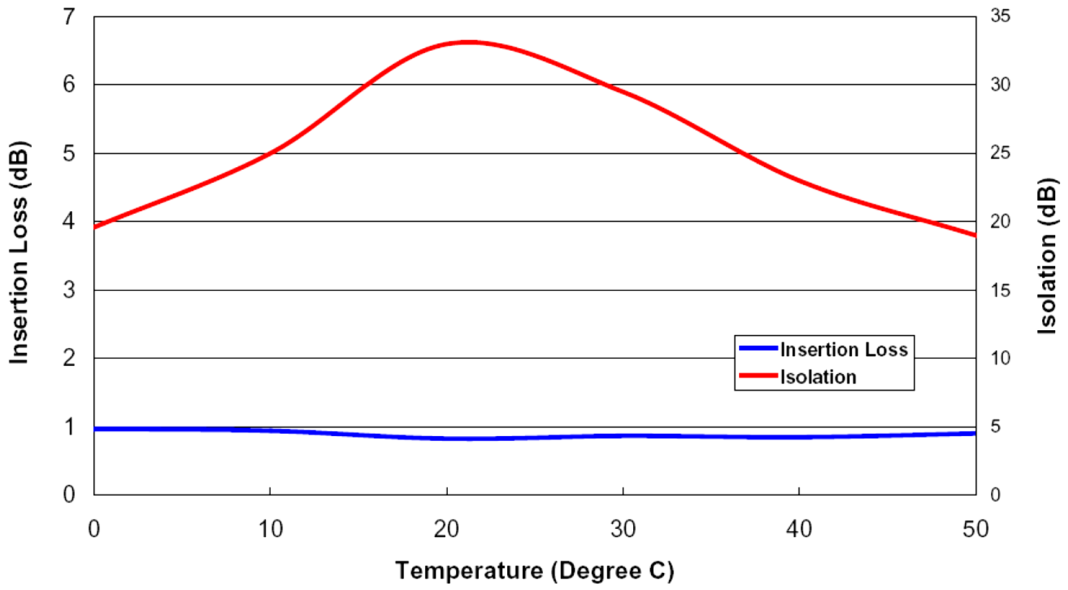

Information contained herein is deemed to be reliable and accurate as of the issue date. Photonwares reserves the right to change the design or specifications at any time without notice.
Agiltron is a registered trademark of Photonwares Corporation in the U.S. and other countries.

www.precisometer.com info@precisometer.com

Fiber Optical Isolator 400-780nm

(up to 5W CW)

DATASHEET

Mechanical Dimensions: Standard (Mini/850) Unit: mm

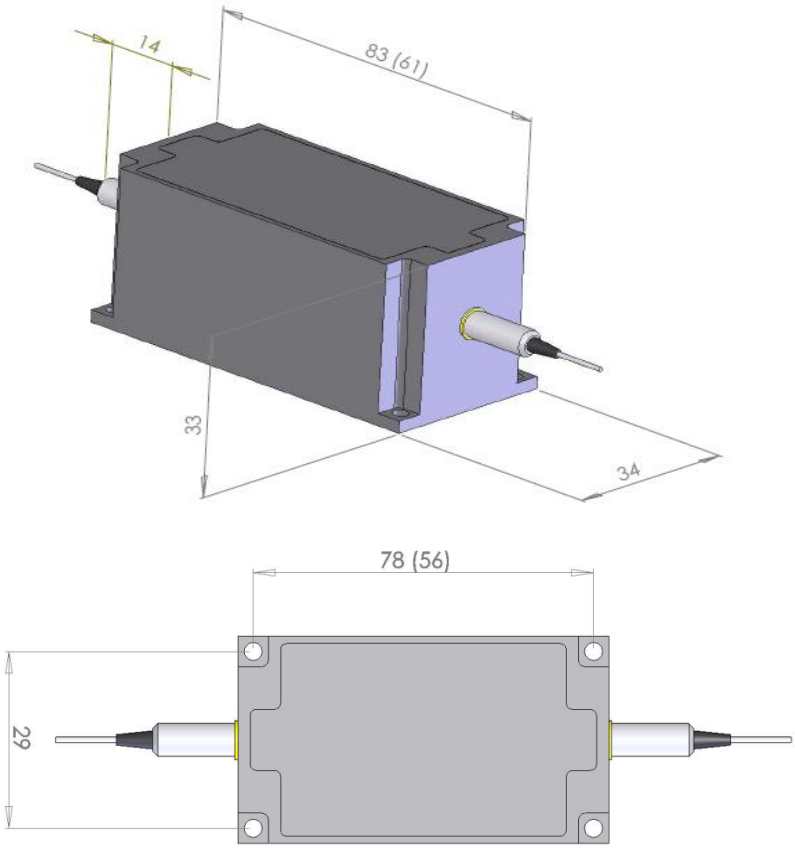

*Product dimensions may change without notice. This is sometimes required for non-standard specifications.

© Photonwares Corporation

P +1 781-935-1200 E sales@photonwares.com W www.agiltron.com

Information contained herein is deemed to be reliable and accurate as of the issue date. Photonwares reserves the right to change the design or specifications at any time without notice.
Agiltron is a registered trademark of Photonwares Corporation in the U.S. and other countries.

Fiber Optical Isolator 400-780nm

(up to 5W CW)

DATASHEET

Ordering Information (Part Number)

	☐	☐	☐	☐	☐	☐	☐	☐	☐
Prefix	**Configuration**	**Tap**	**Wavelength**	**Power**	**Stage**	**Fiber Type**	**Fiber Cover**	**Fiber Length**	**Connector[1]**
OIUW-	Polarization Independent = 1 Polarization Maintaining = 2	Non = 1 Yes = 2 Special = 0	400 = 1 450 = 2 460 = B 500 = 3 550 = 4 600 = 5 633 = C 650 = 6 700 = 7 750 = 8 780 = D 800 = 9 Special = 0	0.3W = 1 1W = 3 2W = 2	Single = 1 Dual = 2	SM400 = 1 SM450 = 2 SM600 = 3 Hi780 = 4 PM405 = A PM460 = B PM630 = C PM780 = D MM50/125 = 5 Special = 0	0.9mm tube = 3 Bare fiber = 1 Special = 0	0.25m = 1 0.5m = 2 1.0m = 3 Special = 0	None = 1 FC/PC = 2 FC/APC = 3 SC/PC = 4 SC/APC = 5 ST/PC = 6 LC/PC = 7 LC/APC = A LC/UPC = U Special = 0

[1]. The default connector configuration uses fiber with 0.9 mm buffer protection. The connector cannot be installed directly onto bare fiber because the bare fiber is prone to damage during shipping. However, the connector can be assembled on bare fiber if a 3 cm protective loose tube is added for reinforcement. The customer may remove this protective tube after testing. The optical power handling of a standard connector is less than 0.5 W for SMF-28 fiber and decreases further for smaller-core fibers.
The default PM fiber connector is **2.0 mm narrow key, with the fiber slow axis aligned to the key**.

Application Notes

Fiber Core Alignment
Note that the minimum attenuation for these devices depends on excellent core-to-core alignment when the connectors are mated. This is crucial for shorter wavelengths with smaller fiber core diameters that can increase the loss of many decibels above the specification if they are not perfectly aligned. Different vendors' connectors may not mate well with each other, especially for angled APC.

Fiber Cleanliness
Fibers with smaller core diameters (<5 μm) must be kept extremely clean, contamination at fiber-fiber interfaces, combined with the high optical power density, can lead to significant optical damage. This type of damage usually requires re-polishing or replacement of the connector.

Maximum Optical Input Power
Due to their small fiber core diameters for short wavelength and high photon energies, the damage thresholds for device is substantially reduced than the common 1550nm fiber. To avoid damage to the exposed fiber end faces and internal components, the optical input power should never exceed 20 mW for wavelengths shorter 650nm. We produce a special version to increase the how handling by expanding the core side at the fiber ends.

Information contained herein is deemed to be reliable and accurate as of the issue date. Photonwares reserves the right to change the design or specifications at any time without notice.
Agiltron is a registered trademark of Photonwares Corporation in the U.S. and other countries.

www.precisometer.com info@precisometer.com

Fiber Optical Isolator 400-780nm

(up to 5W CW)

DATASHEET

Regular Single Mode / Polarization Maintaining Fiber Optical Power Handing vs Wavelength

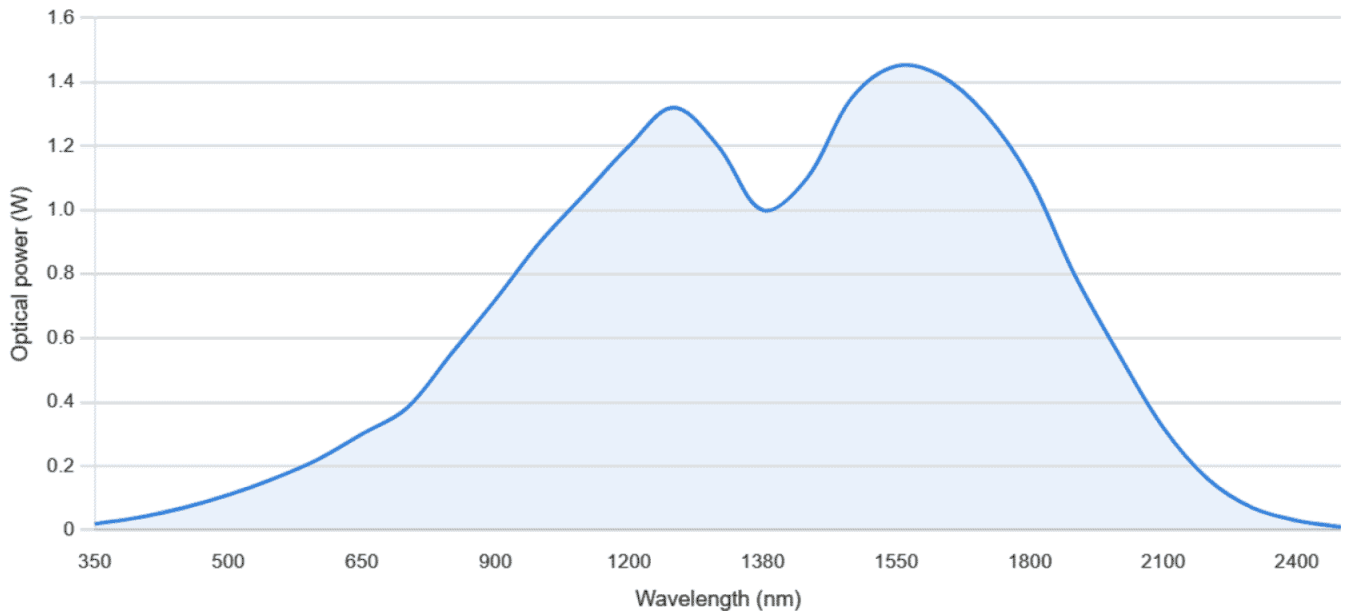

Single mode fiber optical power is limited by nonlinear effects in addition to absorption that increase loss and generate heat. The curve shows the approximate safe CW power envelope for standard single-mode fiber. Actual limits depend on fiber design, core size, length, and laser characteristics. Specialty fibers can significantly increase the power limit.

© Photonwares Corporation
P +1 781-935-1200 E sales@photonwares.com W www.agiltron.com

Information contained herein is deemed to be reliable and accurate as of the issue date. Photonwares reserves the right to change the design or specifications at any time without notice.
Agiltron is a registered trademark of Photonwares Corporation in the U.S. and other countries.

www.precisometer.com info@precisometer.com