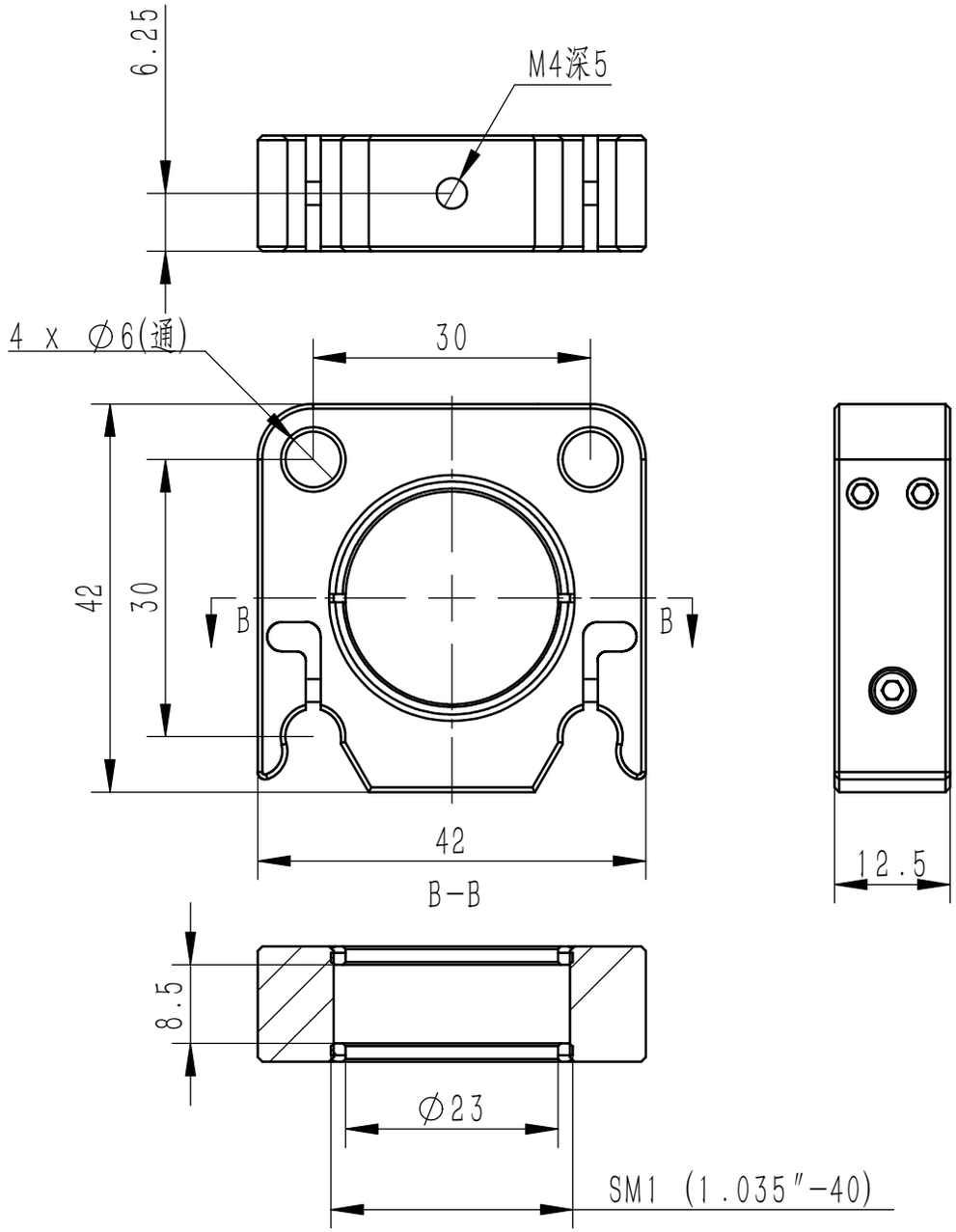
6.25
M4深5
4 x ∅6(通)
30
42
30
B
B
42
B−B
12.5
8.5
∅23
SM1 (1.035″−40)