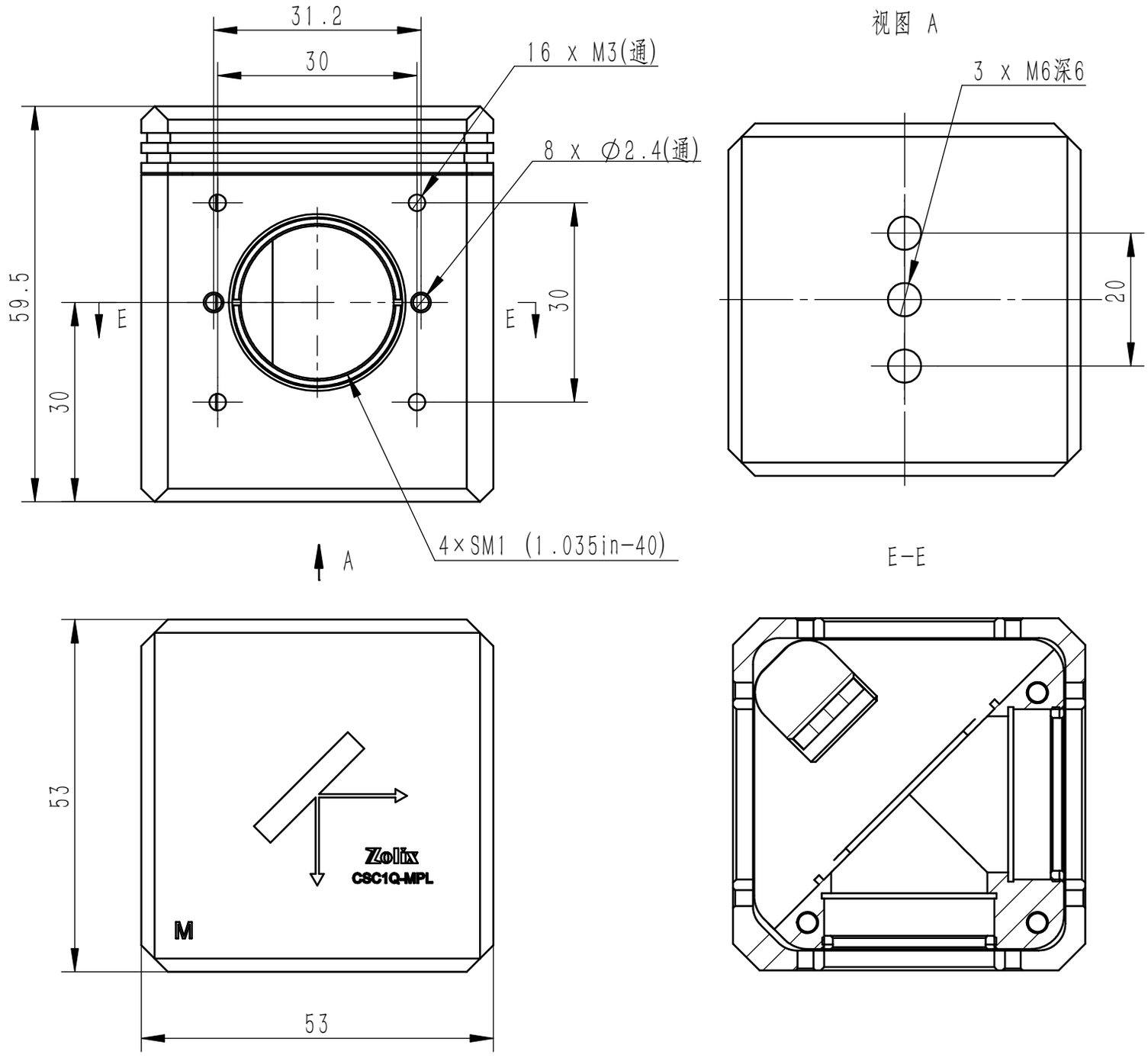
31.2
30
16 x M3(通)
8 x ∅2.4(通)
59.5
30
E
E
30
4×SM1 (1.035in-40)
A
视图 A
3 x M6深6
20
E-E
53
53
Zolix
CSC1Q-MPL
M