BS Series Laser Beam Periscope

Laser beam periscope reflect the laser beam twice, using for raise the laser beam and change the laser beam directions.

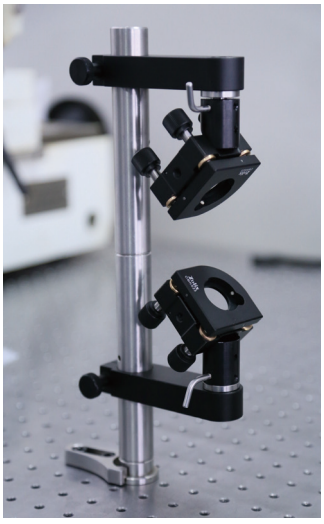

Brief Introduction:

The BSxx series beam periscope features a lockable 360° rotation function and includes a base (PPB15), clamping fork (PPF25), and post (PPE). By adjusting the number of posts, different heights can be achieved, and the maximum height that can be lifted of the lightpath is 150m.

We have designed two models, BSMB150-Max30 and BSMB150-Max50, to accommodate different sizes of kinematic mounts, supporting mounts up to 30mm and 50mm, respectively. We recommend using two pieces of the same series kinematic mounts for easy installation and adjustment. Optimal performance is not guaranteed if the kinematic mounts are not from the Zolix OMHS/OMUS series.

Selection Table:

Model	Name	Include	Overall Height (mm)	Max Laser Beam Raising Height (mm)
BSMB150-Max30	Laser Beam Steerers 30mm mirror mount Max	Adaptors and Connectors for kinematic mirror mount PPE150×2 PPB15×1 PPF25×1	315mm	150
BSMB150-Max50	Laser Beam Steerers 50/50.8mm mirror mount Max	Adaptors and Connectors for kinematic mirror mount PPE150×2 PPB15×1 PPF25×1	315mm	150

Note: The model doesn't include kinematic mirror mount

Related Products:

Connecting Accessories

Dimensions:
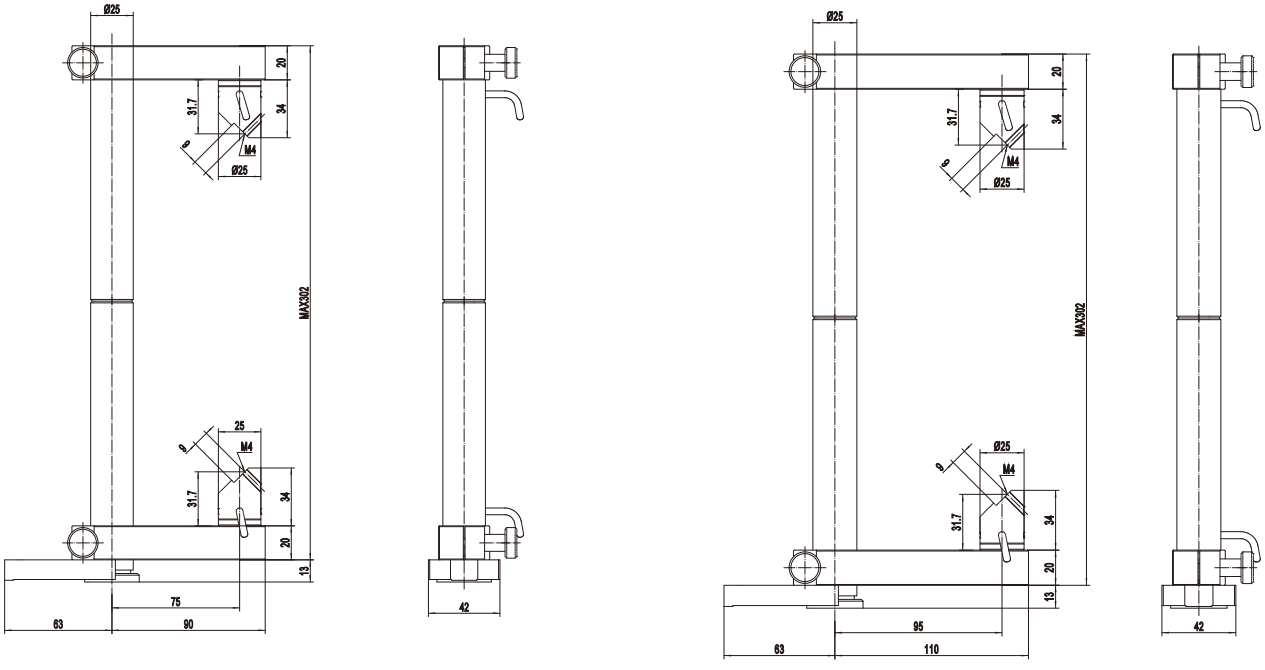
BSMB150-Max30