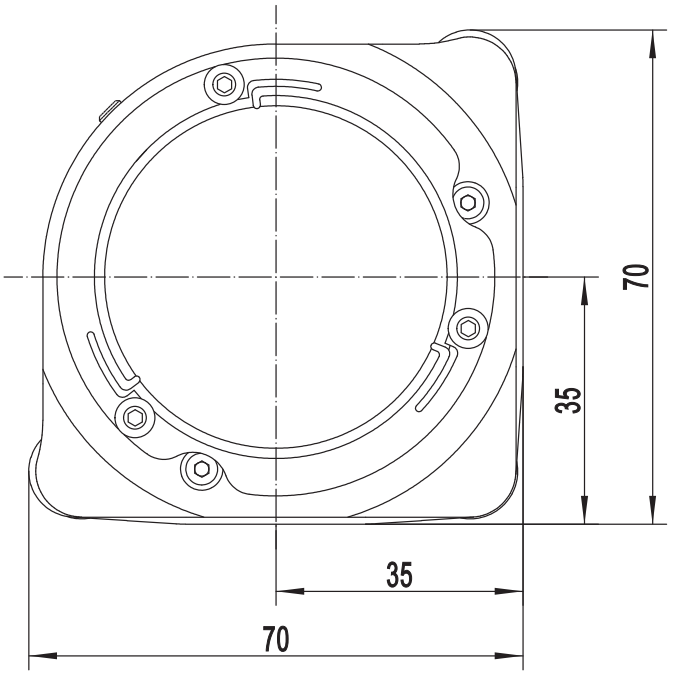
70
35
35
70

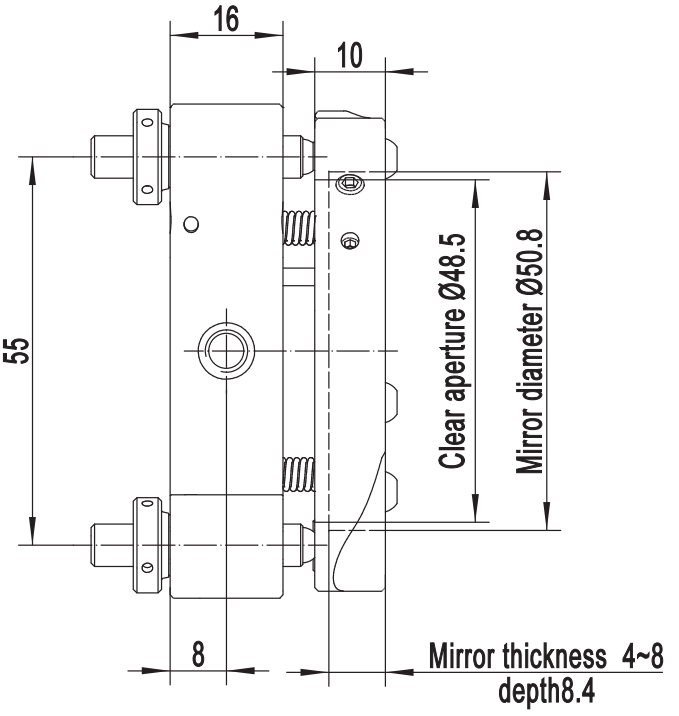
16
10
55
Clear aperture Ø48.5
Mirror diameter Ø50.8
8
Mirror thickness 4~8
depth8.4

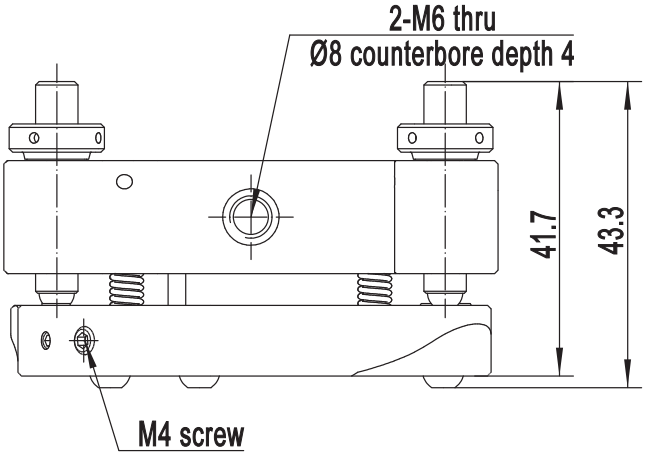
2-M6 thru
Ø8 counterbore depth 4
41.7
43.3
M4 screw