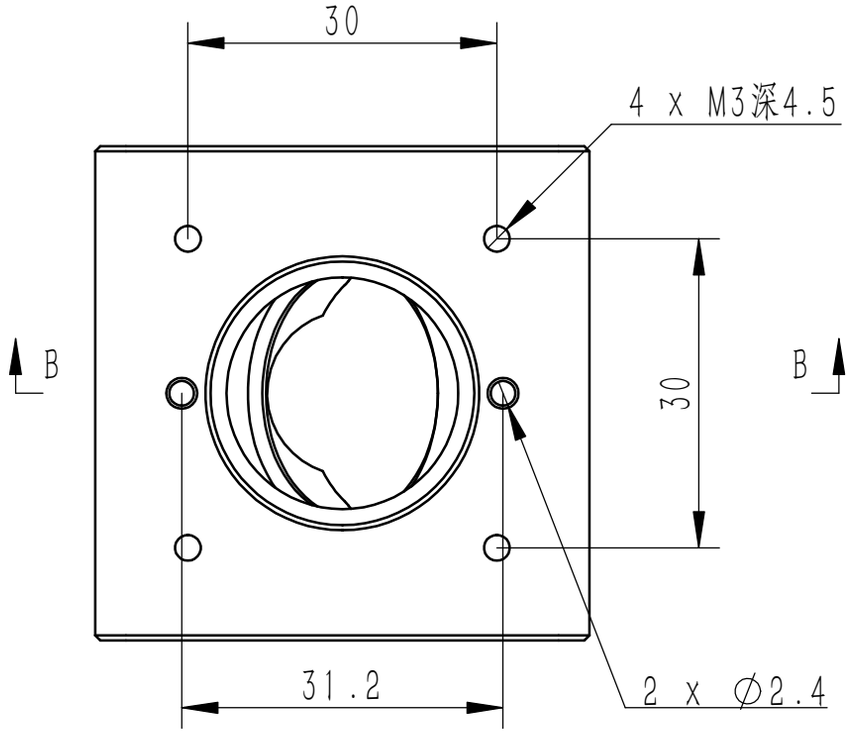
30
4 x M3深4.5
B
B
30
31.2
2 x ∅2.4

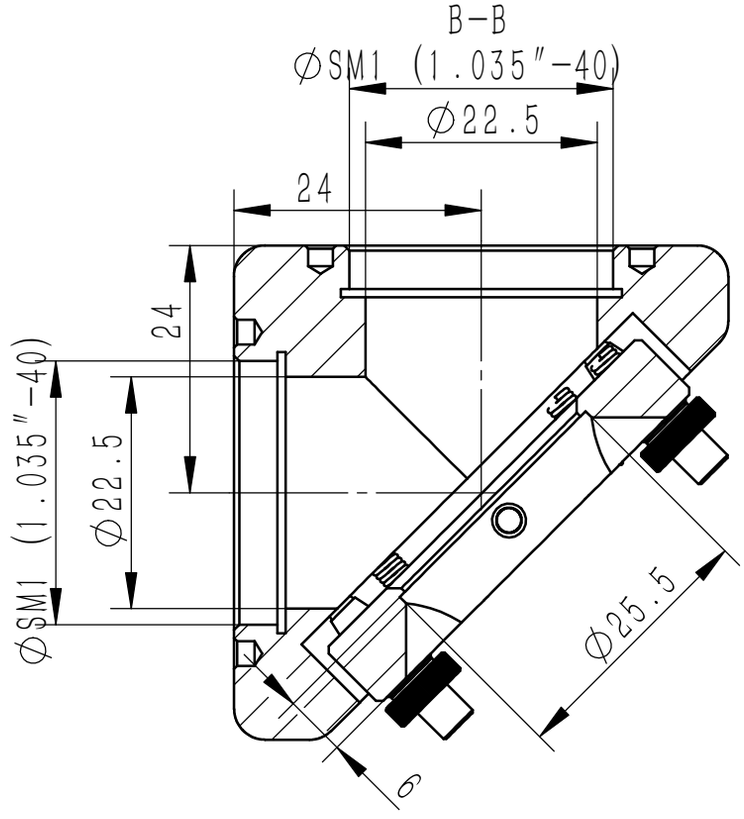
B-B
∅SM1 (1.035″-40)
∅22.5
24
24
∅SM1 (1.035″-40)
∅22.5
∅25.5
6

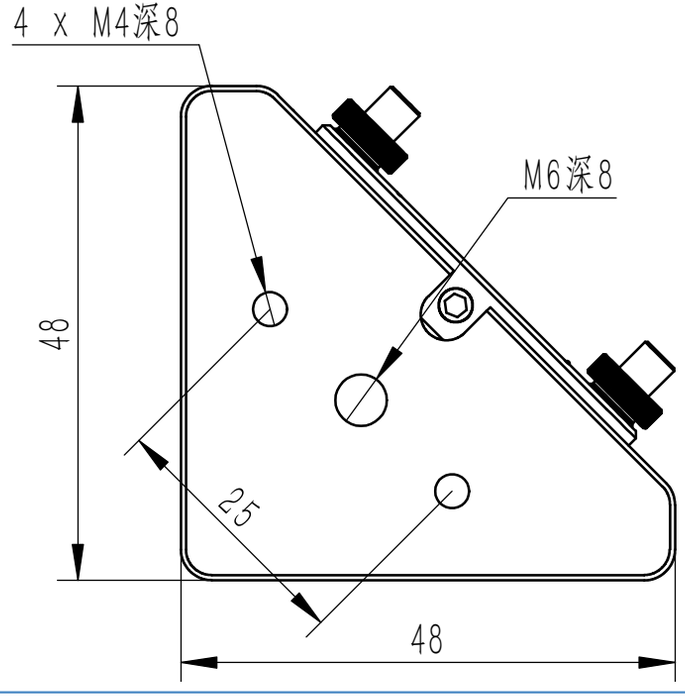
4 x M4深8
M6深8
48
25
48

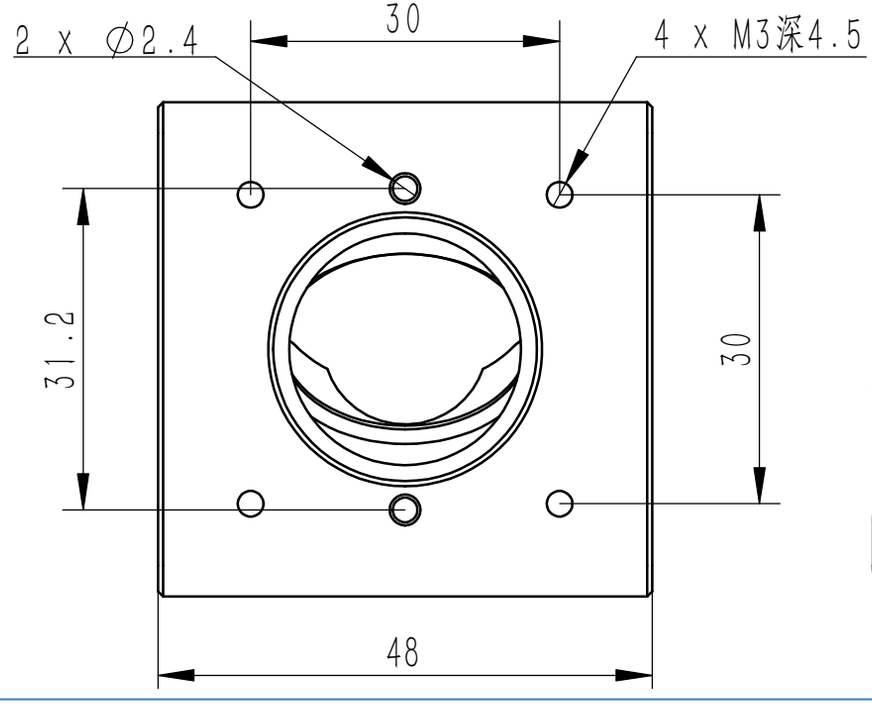
2 x ∅2.4
30
4 x M3深4.5
31.2
30
48

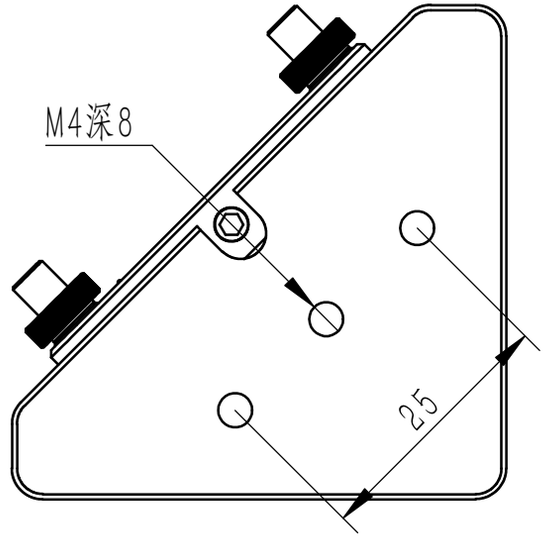
M4深8
25