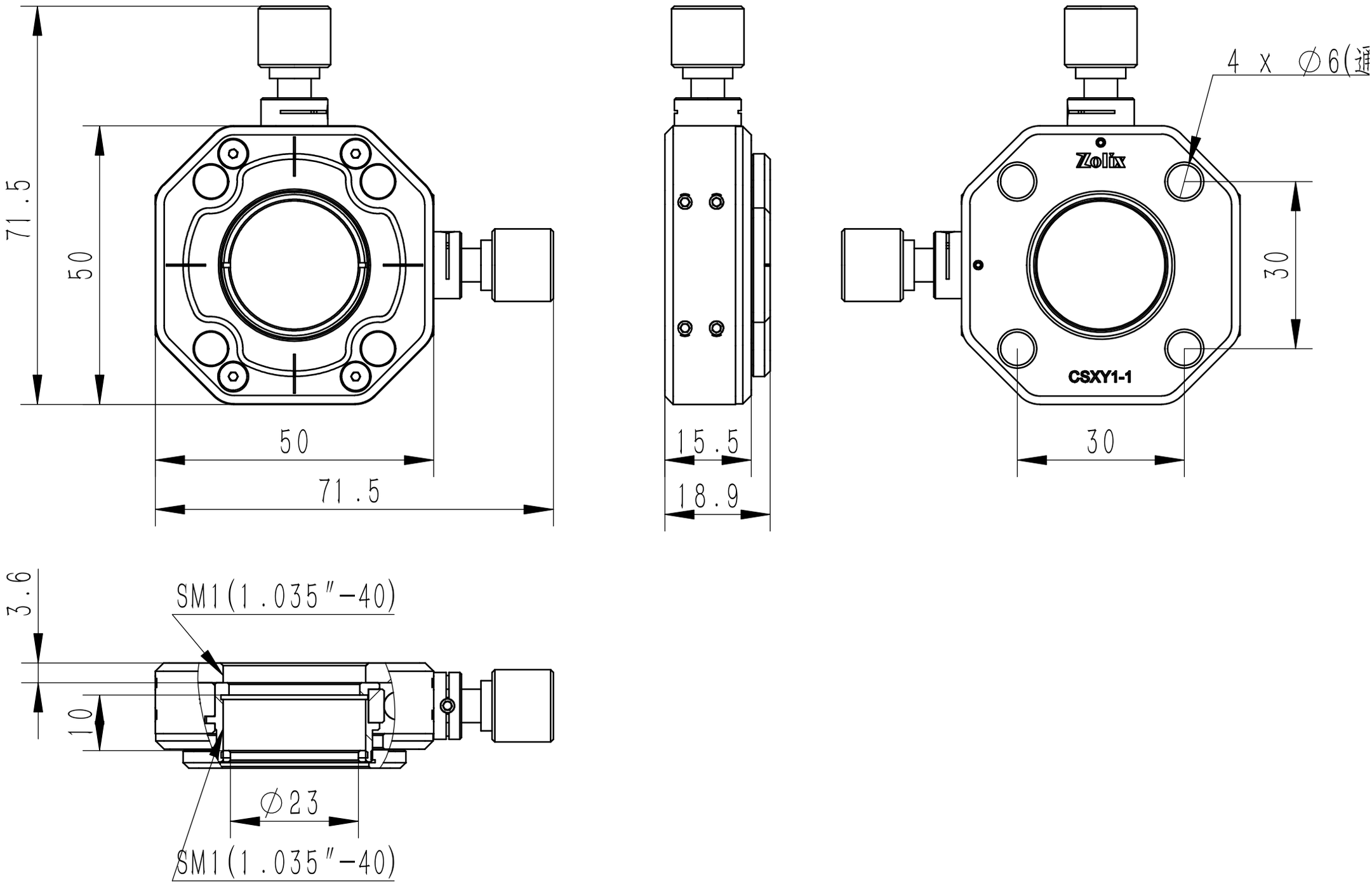
71.5
50
50
71.5
15.5
18.9
4 x ∅6(通
Zolix
CSXY1-1
30
30
3.6
SM1(1.035″-40)
10
∅23
SM1(1.035″-40)