PRECISION LED SPOTLIGHTS WITH UNIFORM ILLUMINATION

Mightex precision LED spotlight consists of a state-of-the-art high-power LED emitter and a proprietary high-NA multi-element aspherical optical system. The result is a high-power, uniform illumination spot with a highly-delineated edge.

Mightex PLS- series precision LED spotlights are a general-purpose light source that can be used where uniform and high-intensity illumination is required. The projection lens at the front of the spotlight can be slid and locked to focus the illumination pattern at different working distances. With the stand- ard projection lens the spot diameter is linearly proportional to the working distance.

The LED emitters are mounted directly on the metal base of the light source which also features an integrated heatsink. This configuration minimizes thermal resistance between the LED emitter and the heatsink resulting in better heat dissipation.

FEATURES

- Uniform illumination spot with a highly delineated edge
- High output power
- Multi-element aspherical optics
- Wide range of available wavelengths
- Adjustable focus
- Multiple mounting features for lab and OEM applications
  Integrated heatsink

APPLICATIONS

- General purpose light source
- Machine vision
- Bio-photonics
- Semiconductor equipment
- UV curing

Multi-chip LED emitters (i.e. Type-B) have been added to the product portfolio. Some of these 7W to 15W LEDs have total optical power exceeding 500mW, doubling the power of a single-chip LED. Such Type-B models with higher powers (7W and higher) feature a cooling fan, and have a different form factor compared to Type-A models. Please examine the installation drawings carefully. Power supply for the cooling fan is included in the price of the Type-B precision LED spotlights.

The precision LED spotlight includes a 2-meter cable with two bare-wire terminals at the end. The light sources can be driven by Mightex's LED controllers, or other LED controllers and current sources.

PLS STANDARD RANGE

PLS high-uniformity, precision standard range LEDs have a minimum working distance of 100mm, being able to produce a 30mm diameter spot at such distance. Spot diameter scales linearly with working distance.

Key Features

100mm minimum working distance

PERFORMANCE SPECIFICATIONS

Type A PLS Standard | *passively cooled*

Part Number	Wavelength (nm)	I_{op} (mA)	V_{op} (V)	Typical Output Power[1] (mW)
PLS-0340-030-02-S	340	500	4.3	11
PLS-0365-030-04-S	365	1000	3.65	250
PLS-0380-030-03-S	380	1000	3.2	65

Type A PLS Standard Range | *continued*

Part Number	Wavelength (nm)	I_{op} (mA)	V_{op} (V)	Typical Output Power[1] (mW)
PLS-0385-030-04-S	385	1000	3.65	250
PLS-0390-030-03-S	390	1000	3.1	140
PLS-0395-030-03-S	395	1000	3.1	150
PLS-0400-030-S	400	350	3.5	50
PLS-0400-030-03-S	400	1000	3.1	150
PLS-0405-030-03-S	405	1000	3	180
PLS-0410-030-03-S	410	1000	3	175
PLS-0415-030-03-S	415	1000	3	120
PLS-0430-030-02-S	430	500	3.8	100
PLS-0455-030-S	455	1000	3.9	150
PLS-0470-030-S	470	1000	3.9	110
PLS-0471-030-02-S	471	350	3	75
PLS-0490-030-01-S	490	350	3.5	80
PLS-0505-030-S	505	1000	3.9	65
PLS-0530-030-S	530	1000	3.9	50
PLS-0560-030-02-S	560 broadband	700	2.9	95
PLS-0590-030-S	590	1000	3.9	35
PLS-0617-030-S	617	1000	3.9	80
PLS-0625-030-S	625	1000	3.9	150
PLS-0656-030-S	656	1000	3.9	180
PLS-0657-030-S	657	350	2.4	50
PLS-0680-030-S	680	600	2.7	20
PLS-0700-030-01-S	700	500	2.1	27
PLS-0720-030-01-S	720	600	2.2	39
PLS-0740-030-S	740	1000	2.5	100
PLS-0780-030-S	780	800	2.5	60
PLS-0810-030-02-S	810	800	2.2	65
PLS-0850-030-S	850	1000	2.1	85
PLS-0870-030-01-S	870	700	1.9	60
PLS-0910-030-02-S	910	1000	1.9	60
PLS-0940-030-S	940	700	1.5	50
PLS-0980-030-01-S	980	500	1.4	16
PLS-3000-030-S	Warm white 3,000K	1000	2.8	70
PLS-4000-030-S	Warm white 4,000K	1000	3.9	85
PLS-5500-030-S	Cool white 5,500K	1000	3.9	85
PLS-6500-030-S	Glacier white 6,500K	1000	3.6	100

[1] Due to variations in the manufacturing process and operating parameters such as temperature and current, the actual output of any given LED may vary. Specifications are intended to be used as a guideline.

Type B PLS Standard | *fan cooling*

Part Number	Wavelength (nm)	I_{op} (mA)	V_{op} (V)	Typical Output Power[1] (mW)
PLS-0365-030-13-S	365	3500	3.85	720
PLS-0385-030-07-S	385	500	15	300
PLS-0385-030-11-S	385	700	15.5	375
PLS-0385-030-13-S	385	3500	3.75	900
PLS-0400-030-17-S	400	1000	16.6	400
PLS-0470-030-15-S	470	1000	15	450
PLS-0505-030-12-S	505	1000	12.2	185
PLS-0530-030-15-S	530	1000	15	200
PLS-0540-030-14-S	540 broadband	3000	4.6	260
PLS-0590-030-05-S	590	500	9.5	130
PLS-0617-030-10-S	617	1000	10.8	450
PLS-0625-030-07-S	625	700	9.6	315
PLS-0656-030-07-S	656	700	9.6	420
PLS-0740-030-10-S	740	1000	9.5	300
PLS-3000-030-12-S	Warm white 3,000K	1000	12	320
PLS-5500-030-12-S	Cool white 5,500K	1000	12	400
PLS-6500-030-15-S	Glacier white 6,500K	1000	15	400

* When ordering an LED controller for a Type-B LED, please make sure to upgrade the AC/DC power adapter from the standard 12V to 24V.
[1] Due to variations in the manufacturing process and operating parameters such as temperature and current, the actual output of any given LED may vary. Specifications are intended to be used as a guideline.

Type H PLS Standard | *super high-power, fan cooling*

Part Number	Wavelength (nm)	I_{op} (A)	V_{op} (V)	Typical Output Power[1] (mW)
PLS-0365-030-48-S	365	12	3.9	1100
PLS-0405-030-50-S	405	13	3.8	1350
PLS-0470-030-50-S	470	13	3.8	1850
PLS-0525-030-60-S	525	13	4.6	715
PLS-0560-030-68-S	560 Broadband	18	3.8	1800
PLS-0625-030-38-S	625	13	2.9	605
PLS-0730-030-77-S	730	18	5.9	2100
PLS-6500-030-33-S	6,500K, 30W	9	3.7	1100
PLS-6500-030-65-S	6,500K, 65W	18	3.7	2000

[1] Due to variations in the manufacturing process and operating parameters such as temperature and current, the actual output of any given LED may vary. Specifications are intended to be used as a guideline.

PLS CLOSE RANGE

PLS high-uniformity, precision close range LEDs have a minimum working distance of 75mm, being able to produce a 10mm diameter spot at such distance. These LEDs also have a maximum working distance of 100mm, producing a spot 17mm in diameter.

Key Features

75mm minimum working distance
100mm maximum working distance

PERFORMANCE SPECIFICATIONS

Type A PLS Close Range | *passively cooled*

Part Number	Wavelength (nm)	I_{op} (mA)	V_{op} (V)	Typical Output Power[1] (mW)
PLS-0340-010-02-C	340	500	4.3	11
PLS-0365-010-04-C	365	1000	3.65	180
PS-0380-010-03-C	380	1000	3.2	65
PLS-0385-010-04-C	385	1000	3.65	250
PLS-0390-010-03-C	390	1000	3.1	140
PLS-0395-010-03-C	395	1000	3.1	150
PLS-0400-010-03-C	400	1000	3.1	150
PLS-0405-010-03-C	405	1000	3.1	180
PLS-0410-010-03-C	410	1000	3.1	175
PLS-0415-010-03-C	415	1000	3.1	120
PLS-0430-010-02-C	430	500	3.8	100
PLS-0455-010-C	455	1000	3.9	150
PLS-0470-010-C	470	1000	3.9	110
PLS-0471-010-02-C	471	350	3	75
PLS-0490-010-01-C	490	350	3.5	80
PLS-0505-010-C	505	1000	3.9	65
PLS-0530-010-C	530	1000	3.9	50
PLS-0560-010-02-C	560 broadband	700	2.9	95
PLS-0590-010-C	590	1000	3.9	35
PLS-0617-010-C	617	1000	3.9	80
PLS-0625-010-C	625	1000	3.9	90
PLS-0656-010-C	656	1000	3.9	180
PLS-0657-010-C	657	350	2.4	50
PLS-0680-010-02-C	680	600	2.7	20
PLS-0700-010-01-C	700	500	2.1	27
PLS-0720-010-01-C	720	600	2.2	39
PLS-0740-010-03-C	740	1000	2.4	100
PLS-0780-010-C	780	800	2.5	60
PLS-0810-010-02-C	810	800	2.2	65
PLS-0850-010-C	850	1000	2.1	85
PLS-0870-010-01-C	870	700	1.9	60
PLS-0910-010-02-C	910	1000	1.9	60

Type A PLS Close Range | *continued*

Part Number	Wavelength (nm)	I_{op} (mA)	V_{op} (V)	Typical Output Power[1] (mW)
PLS-0940-010-C	940	700	1.5	50
PLS-0980-010-01-C	980	500	1.4	16
PLS-3000-010-C	Warm white 3,000K	1000	2.8	70
PLS-4000-010-C	Warm white 4,000K	1000	3.9	85
PLS-5500-010-C	Cool white 5,500K	1000	3.9	85
PLS-6500-010-C	Glacier white 6,500K	1000	3.6	100

[1] Due to variations in the manufacturing process and operating parameters such as temperature and current, the actual output of any given LED may vary. Specifications are intended to be used as a guideline.

Type B PLS Close Range | *fan cooling*

Part Number	Wavelength (nm)	I_{op} (mA)	V_{op} (V)	Typical Output Power[1] (mW)
PLS-0365-010-13-C	365	3500	3.85	720
PLS-0385-010-07-C	385	500	15	300
PLS-0385-010-11-C	385	700	15.5	375
PLS-0385-010-13-C	385	3500	3.75	900
PLS-0400-010-17-C	400	1000	16.6	400
PLS-0470-010-15-C	470	1000	15	450
PLS-0505-010-12-C	505	1000	12.2	185
PLS-0530-010-15-C	530	1000	15	200
PLS-0540-010-14-C	540 broadband	3000	4.6	260
PLS-0590-010-05-C	590	500	9.5	130
PLS-0617-010-10-C	617	1000	10.8	200
PLS-0625-010-07-C	625	700	9.6	155
PLS-0656-010-07-C	656	700	9.6	420
PLS-0740-010-10-C	740	1000	9.5	300
PLS-3000-010-12-C	Warm white 3,000K	1000	12	320
PLS-5500-010-12-C	Cool white 5,500K	1000	12	400
PLS-6500-010-15-C	Glacier white 6,500K	1000	15	400

* When ordering an LED controller for a Type-B LED, please make sure to upgrade the AC/DC power adapter from the standard 12V to 24V.
[1] Due to variations in the manufacturing process and operating parameters such as temperature and current, the actual output of any given LED may vary. Specifications are intended to be used as a guideline.

Type H PLS Close Range | *super high-power, fan cooling*

Part Number	Wavelength (nm)	I_{op} (A)	V_{op} (V)	Typical Output Power[1] (mW)
PLS-0365-010-48-C	365	12	3.9	320
PLS-0405-010-50-C	405	13	3.8	390
PLS-0470-010-50-C	470	13	3.8	630
PLS-0525-010-60-C	525	13	4.6	240
PLS-0560-010-68-C	560 Broadband	18	3.8	950
PLS-0625-010-38-C	625	13	2.9	200
PLS-0730-010-77-C	730	18	5.9	650
PLS-6500-010-33-C	Glacier White 6,500K	9	3.7	400
PLS-6500-010-65-C	Glacier white 6,500K	18	3.7	680

[1] Due to variations in the manufacturing process and operating parameters such as temperature and current, the actual output of any given LED may vary. Specifications are intended to be used as a guideline.

LED SPECTRA

MIGHTEX LED WAVELENGTH PORTFOLIO

New LED wavelengths are continually added to the portfolio. Please visit **www.mightexsystems.com** for updated list.

MIGHTEX DUV LED WAVELENGTH PORTFOLIO

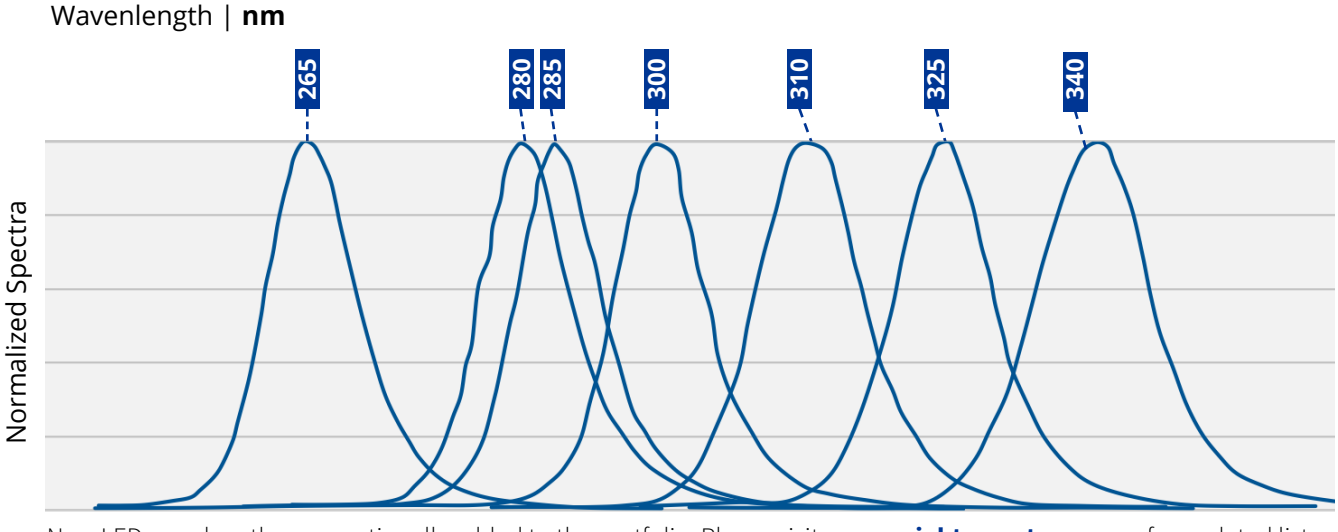

New LED wavelengths are continually added to the portfolio. Please visit **www.mightexsystems.com** for updated list.

INSTALLATION DRAWINGS

PLS Series LED Uniform Spotlight Standard Range, Type-A

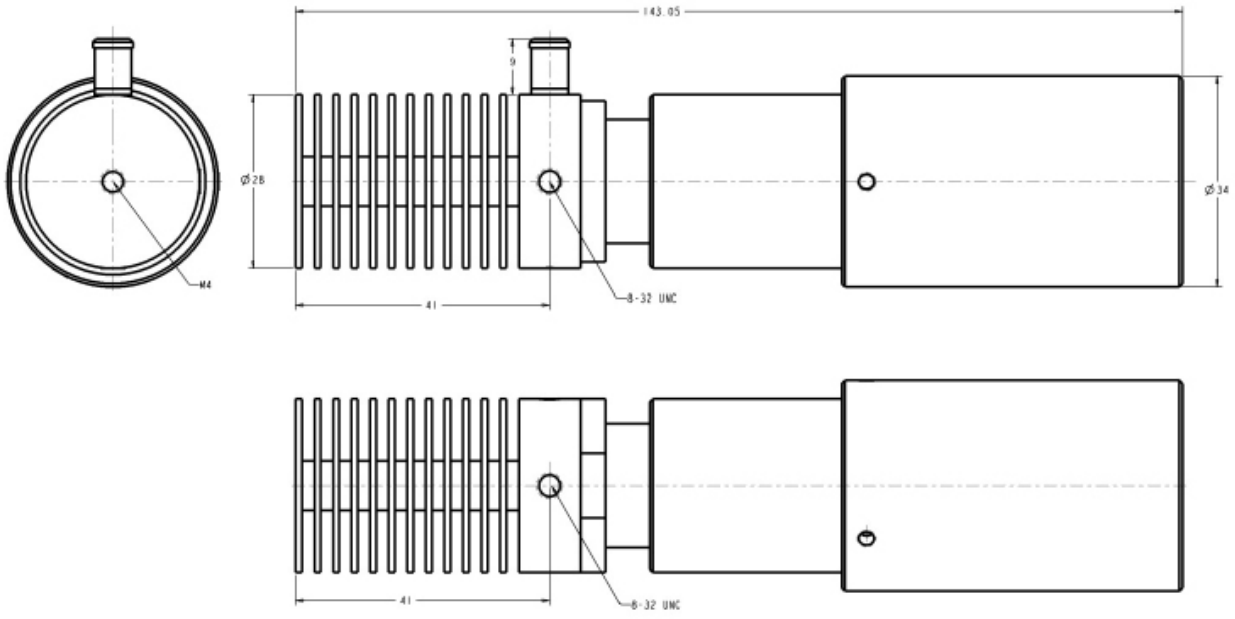

PLS Series LED Uniform Spotlight Standard Range, Type-B

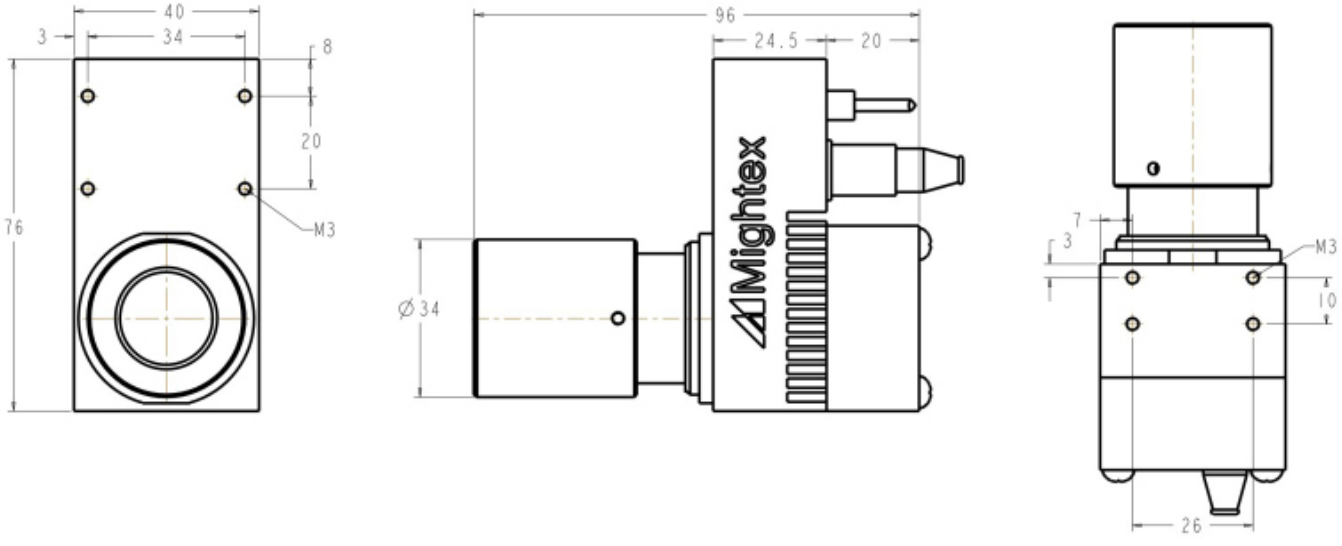

PLS Series LED Uniform Spotlight Standard Range, Type-H

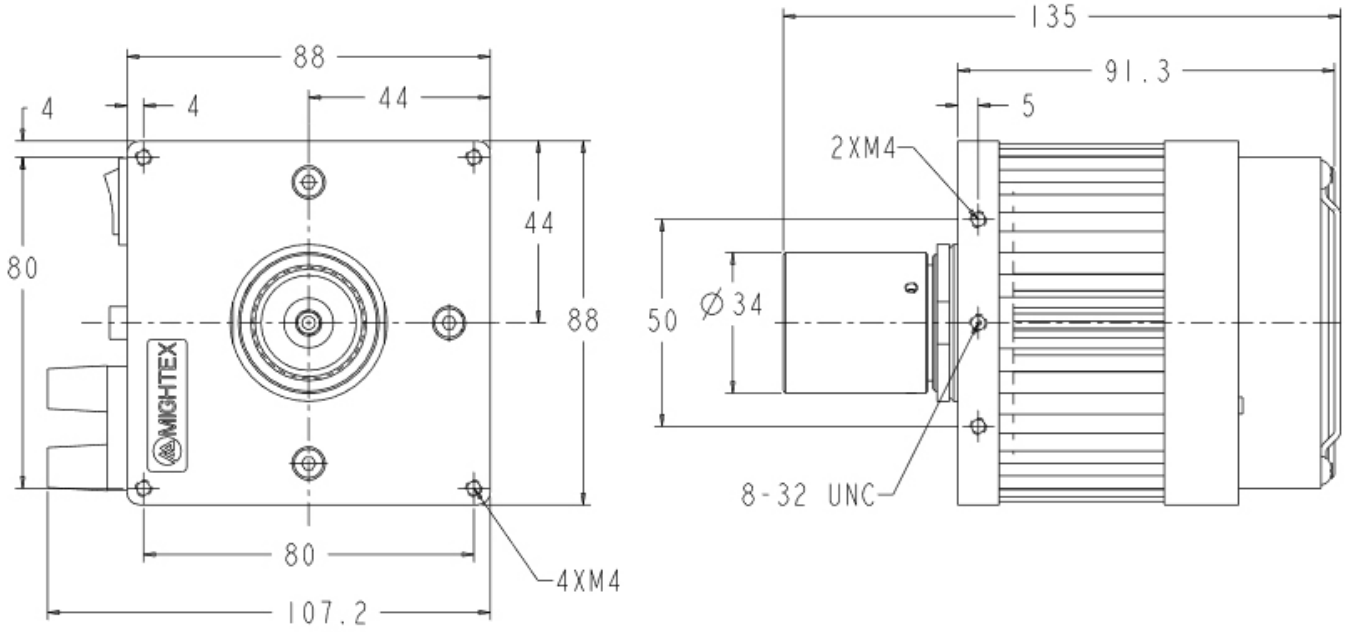

PLS Series LED Uniform Spotlight Close Range, Type-A

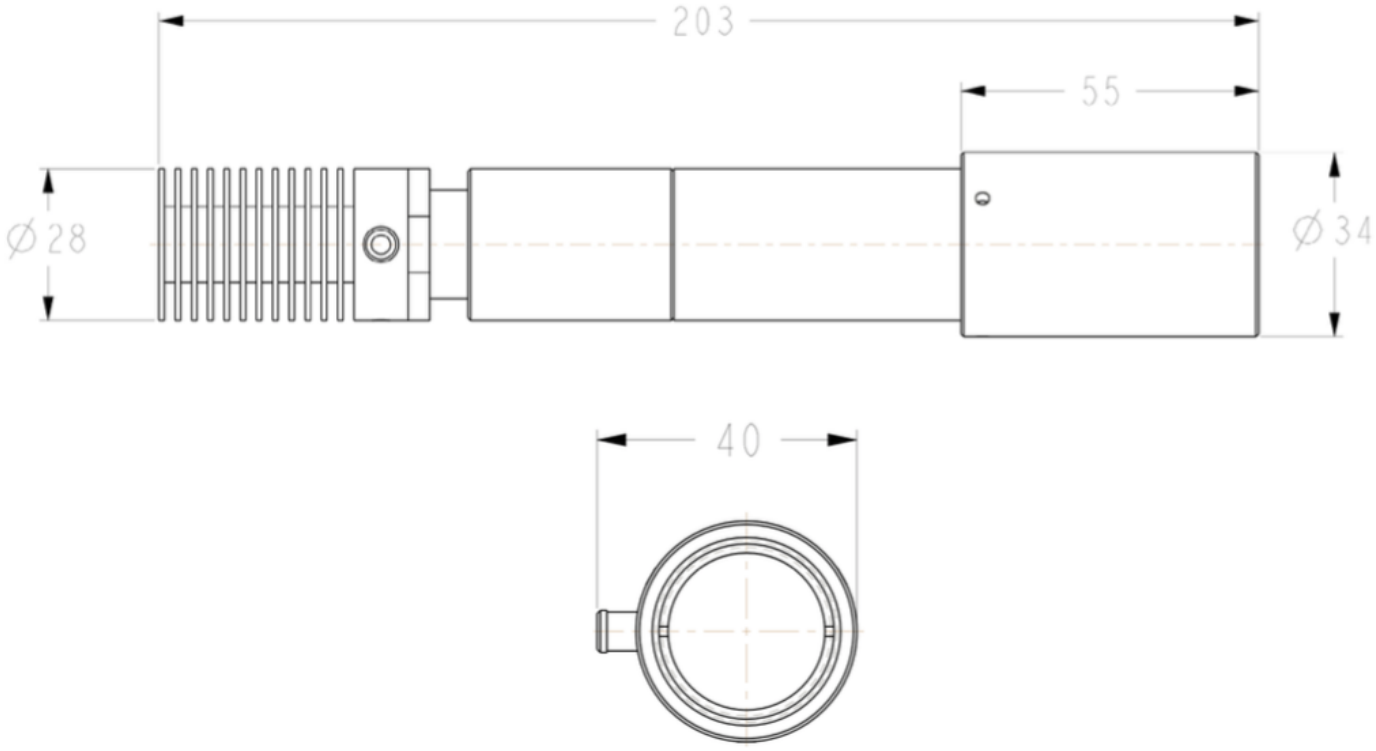

PLS Series LED Uniform Spotlight Close Range, Type-B

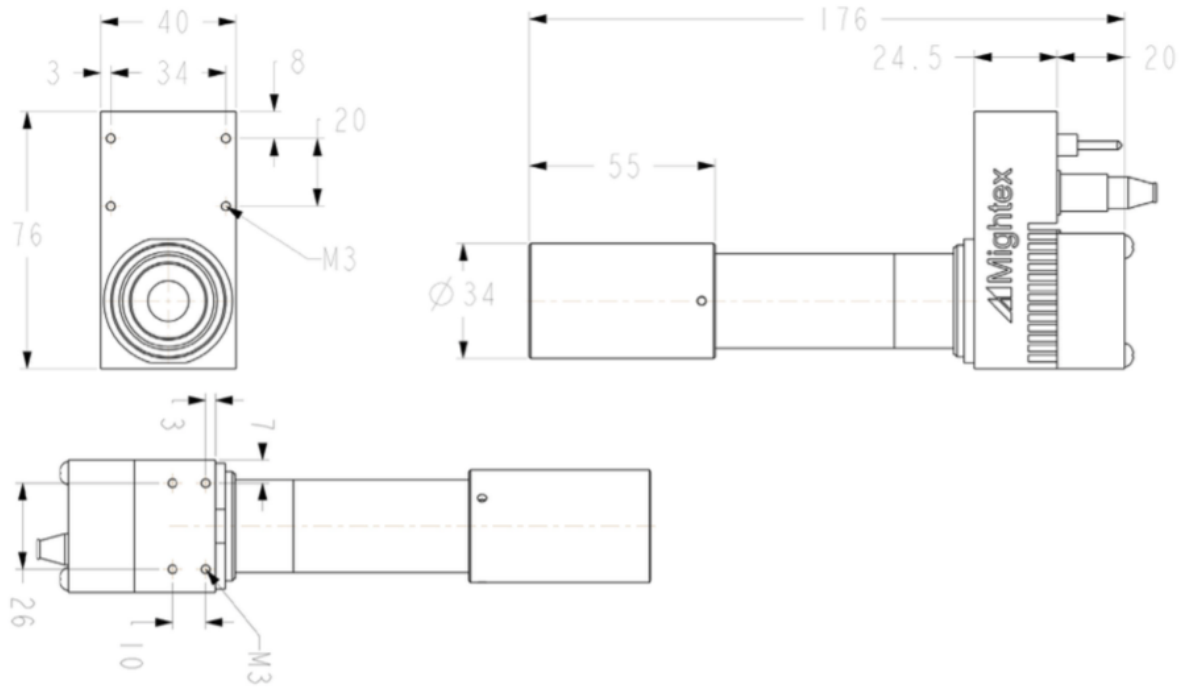

PLS Series LED Uniform Spotlight Close Range, Type-H

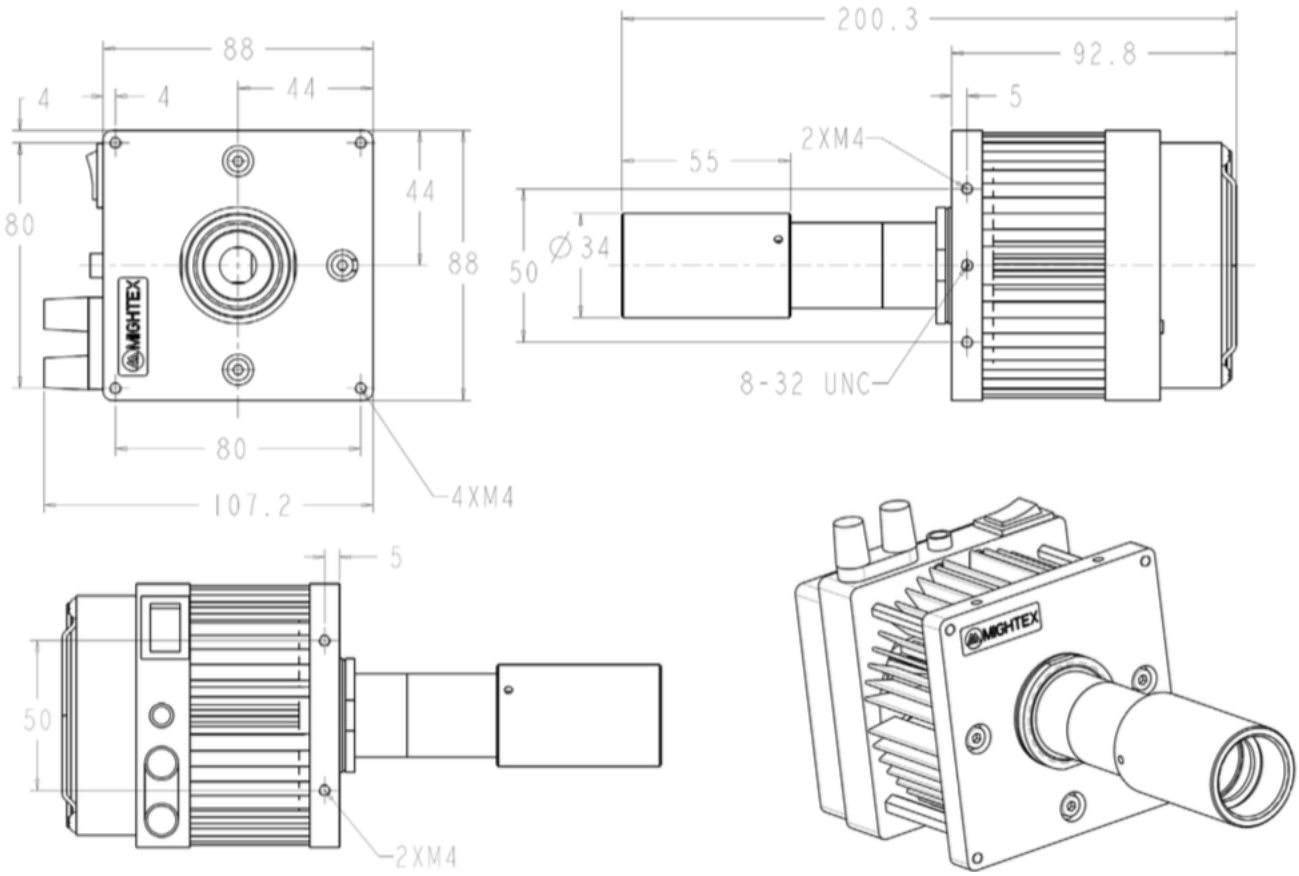

PART NUMBER AND ORDERING INFORMATION

PLS-□□□□-□□□-□□-X

Wavelength

Beam Diameter

Electrical Power

S - Standard Range
C - Close Range

For example, PLS-0455-030-S has a wavelength of 455nm and beam diameter of 30mm at a working distance of 100m

With a world-class OEM design team, Mightex offers a broad range of customized solutions in order to meet individual customer's unique requirements. Please call 1-925-218 1885 or email sales@mightex.com for details.

ORDER NOW

Our primary goal is to help you find the optimal solution for your application. We have a dedicated technical support and sales team committed to providing guidance on our LED illumination and other Mightex products.

PRECISOMETER | **European Distributor of Mightex**

Official Distribution, System Integration & Local Technical Support Partner

European Office & Lab:
Precisometer (Wfront Principle B.V.)
Eisingastraat 9, 2201 DJ Noordwijk, Netherlands

Regional Coverage & Inquiries:
· Direct EUR Quotes & Official EU Warranty
· In-Person Support in Netherlands, Belgium & EU

Explore Products, Request Quotes & Configure Online: https://www.precisometer.com/mightex

Please visit **www.mightexsystems.com**
for more information!

CONTACT US

US OFFICE

1241 Quarry Lane, Suite 105
Pleasanton, CA 94566
USA
TEL: 1-925-218-1885

CANADA OFFICE

111 Railside Road, Suite 201
Toronto, ON M3A 1B2
Canada
TEL: 1-416-840-4991