Buffered USB2.0 Color 1.4MP CCD Cameras

(Part Numbers: CCN-C013-U, CCE-C013-U)

FEATURES

- Built-in frame buffer (24 frames at full resolution)
- Support simultaneous image capturing from multiple cameras
- 4-pin GPIOs
- Higher sensitivity than CMOS cameras
- 1,392 x 1,040 active pixels
- High-speed USB2.0 (480Mb/s)
- Digital output, no need for frame grabber
- Full-featured SDK
- DirectShow and TWAIN driver
- USB command set for non-Windows based applications
- Linux driver available
- External and Software trigger
- Strobe output for external flash
- ROI & pixel skipping/ binning
- No need for external power supply
- OEM versions available

APPLICATIONS

- Digital microscopy
- Machine vision
- Medical imaging
- Semiconductor equipment
- Test instruments
- Document scanners
- 2D barcode readers
- Web camera and security video
- High-quality ID photos

PRODUCT DESCRIPTION

Mightex USB 2.0 CCD cameras with frame buffers are optimized for machine-vision applications, and they can be also used for a wide variety of applications (such as industrial inspections, digital microscopy and medical imaging) which require good quality cameras that are easy to use and cost-effective. These cameras have built-in frame buffers, external trigger-in, strobe-out, and a powerful camera engine that supports multiple cameras. Frame rate can be as high as 15 fps in full resolution and up to 80 fps using ROI mode. A user-friendly GUI based application software and an SDK are provided for custom software development. In addition, a DirectShow driver and a TWAIN driver are available to easily link the cameras with users' applications. A USB command set protocol and a Linux driver are also provided for non-Windows based applications.

PERFORMANCE SPECIFICATIONS

Parameters	CCN-C013-U	CCE-C013-U	Unit
Board-level / enclosed	Board-level	Enclosed	
Number of GPIOs	4	4	
Resolution	1,392 x 1,040 Color		
Bit	8/12		bits
CCD Chip	1/3" Sony ICX205AK, Global Shutter		
Pixel Size	4.65 x 4.65		µm
Active Imager Size	7.60 x 6.20		mm
Scanning System	Progressive		
Frame Rates* (@28MHz Clock)	15 @1,392 x 1,040 49 @348 x 256 (1:4 Skip)* Resolution dependent @ ROI		fps
Sub Resolutions	348 x 256 (1:4 Skip)		
Shutter Speed (Exposure time)	0.05 ~ 200,000		ms
Hardware Gains	6 ~ 43		dB
Trigger Mode	With external trigger **		
Trigger Delay	< 25		µs
Strobe Out	Yes		
Lens Mount	C– mount or CS-mount		
Built-in Filters	IR-cut (factory standard), no filter, or IR-pass		
Power Consumption	< 1.8		W
Dimension	89 x 64 x 34 (CS-mount) 89 x 64 x 39 (C-mount)	95 x 70 x 38.5 (CS-mount) 95 x 70 x 43.5 (C-mount)	mm
Weight (excluding lens)	80	150	g

* The actual achievable frame rate depends on exposure time, as well as available resources of PC system.
** Part number of the trigger cable for external trigger : ACC-CAM-DIN8

Mightex Systems, 2343 Brimley Road, Suite 868, Toronto, Ontario M1S 3L6, Canada
Tel: 1-416-840-4991 or 1-925-218-1885, Fax: 1-416-840-6541, Email: sales@mightex.com
www.mightex.com or www.mightexsystems.com

Mightex
Simply Brighter

OPERATION CONDITION

Operating Temperature Range:	0°C ~ 45°C
Storage Temperature Range:	-25°C ~ 85°C
Relative Humidity, Non-condensing:	5% ~ 95%

RECOMMENDED SYSTEM CONFIGURATION

Processor:	Pentium III 900 MHz or better, or a compatible processor
Operating System:	Windows 2000, XP, Vista, Windows 7 and 8
RAM:	256MB or greater
Hard Disk Space:	30MB for software installation, plus additional space for storing captured images
USB2.0 Host Controller:	Intel integrated host controller (recommended)

EXAMPLE OF GRAPHICAL USER INTERFACE

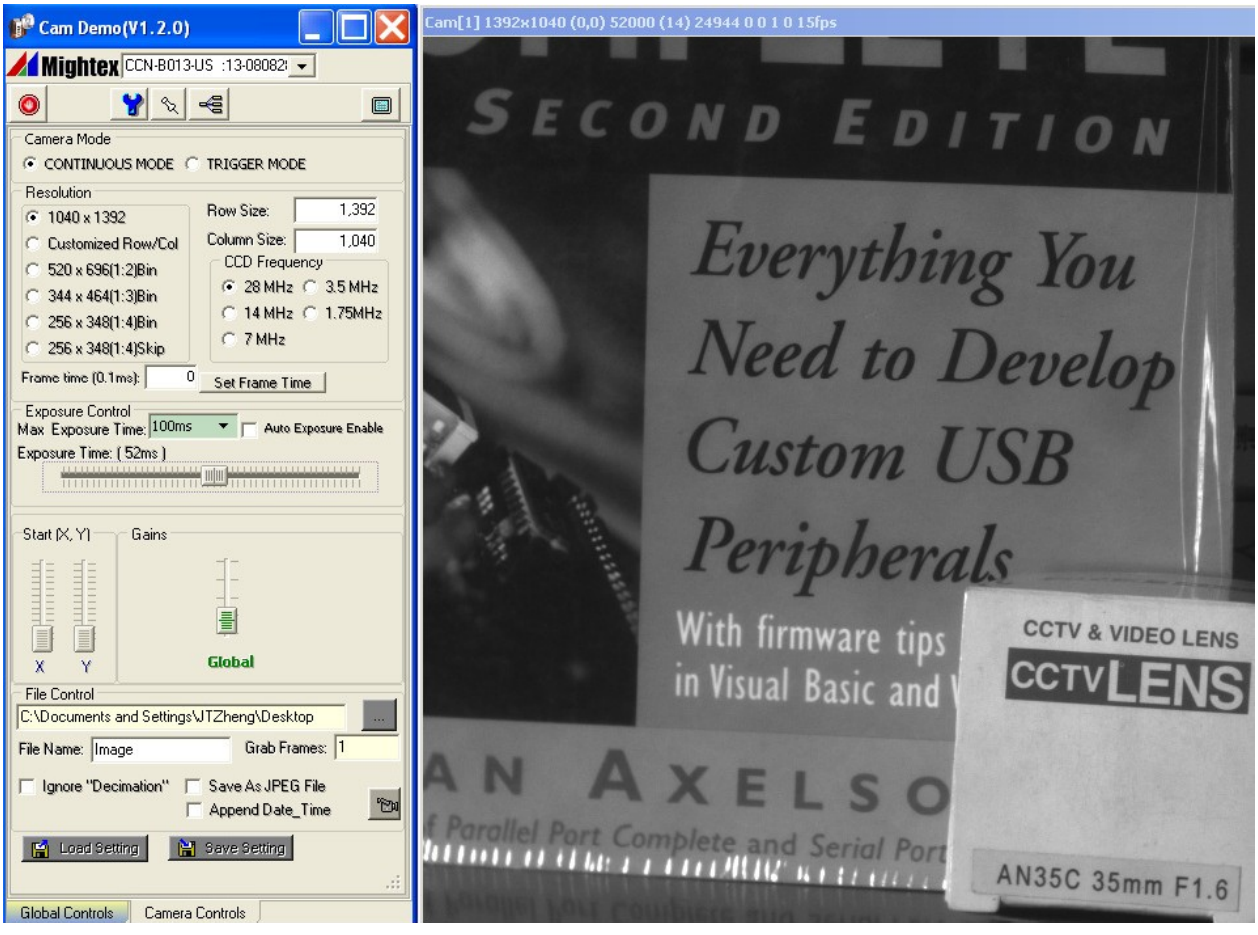

Mightex Systems, 2343 Brimley Road, Suite 868, Toronto, Ontario M1S 3L6, Canada
Tel: 1-416-840-4991 or 1-925-218-1885, Fax: 1-416-840-6541, Email: sales@mightex.com
www.mightex.com or www.mightexsystems.com

Mightex
Simply Brighter

INSTALLATION DRAWINGS

1) Board-level Camera with CS-mount

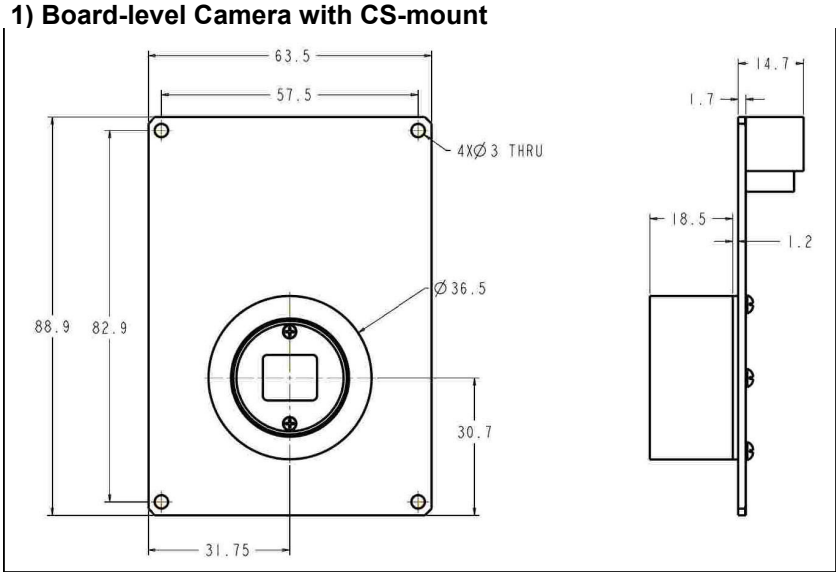

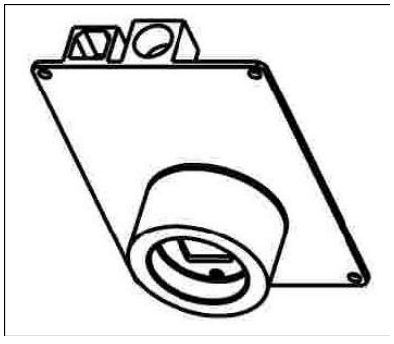

2) Enclosed camera with CS-mount

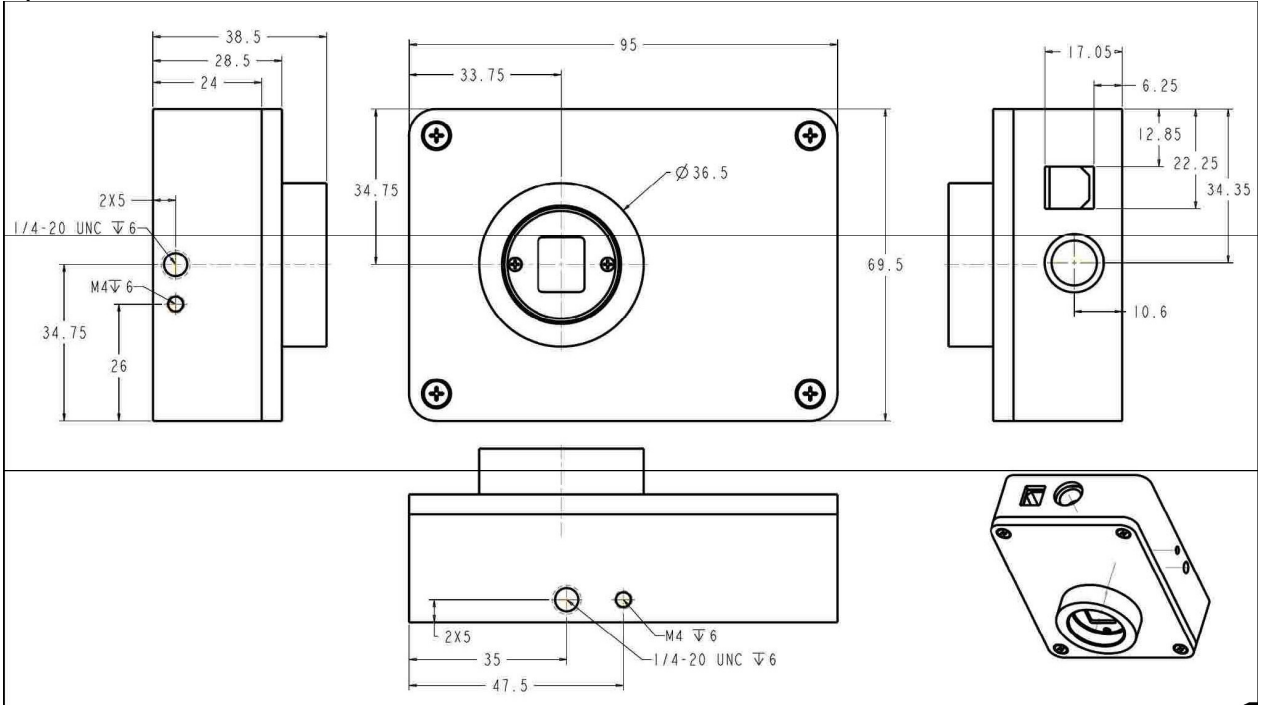

Mightex Systems, 2343 Brimley Road, Suite 868, Toronto, Ontario M1S 3L6, Canada
Tel: 1-416-840-4991 or 1-925-218-1885, Fax: 1-416-840-6541, Email: sales@mightex.com
www.mightex.com or www.mightexsystems.com

WHAT'S IN A C-MOUNT CAMERA?

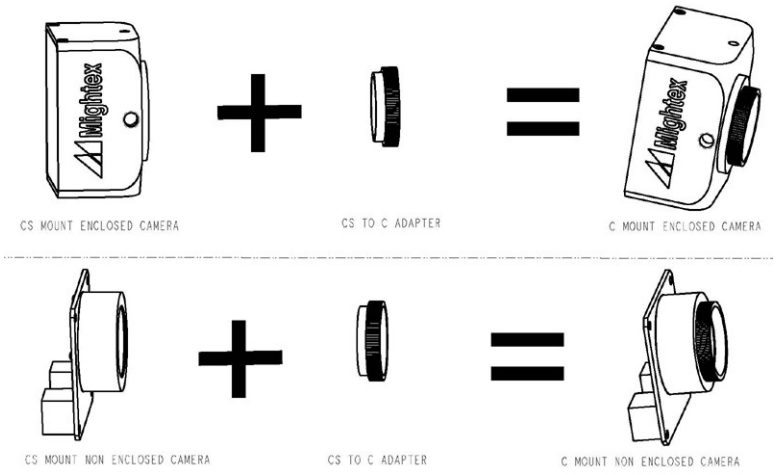

A C-mount camera is composed of a CS-mount camera and a CS-to-C-mount adapter. The latter is essentially a 5mm thick threaded ring.

With a world-class OEM design team, Mightex offers a broad range of customized solutions in order to meet individual customer's unique requirements. Please call 1-416-840 4991 or email sales@mightex.com for details.

PRECISOMETER | **European Distributor of Mightex**

Official Distribution, System Integration & Local Technical Support Partner

European Office & Lab:
Precisometer (Wfront Principle B.V.)
Eisingastraat 9, 2201 DJ Noordwijk, Netherlands

Regional Coverage & Inquiries:
· Direct EUR Quotes & Official EU Warranty
· In-Person Support in Netherlands, Belgium & EU

Explore Products, Request Quotes & Configure Online: https://www.precisometer.com/mightex

Mightex Systems, 2343 Brimley Road, Suite 868, Toronto, Ontario M1S 3L6, Canada
Tel: 1-416-840-4991 or 1-925-218-1885, Fax: 1-416-840-6541, Email: sales@mightex.com
www.mightex.com or www.mightexsystems.com

Mightex
Simply Brighter