Buffered USB2.0 Monochrome 1.4MP CCD Cameras
(Part Numbers: CCN-B013-U, CCE-B013-U)

FEATURES

- Built-in frame buffer (8 frames at full resolution)
- Support simultaneous image capturing from multiple cameras
- 4-pin GPIOs
- Higher sensitivity than color cameras especially in IR
- 1,392 x 1,040 active pixels
- High-speed USB2.0 (480Mb/s)
- Digital output, no need for frame grabber
- Full-featured SDK
- TWAIN and DirectShow drivers
- Linux driver available
- USB command set protocol for non-Windows based applications
- External and Software trigger
- Strobe output for external flash
- ROI & pixel skipping/ binning
- No need for external power supply
- OEM versions available

APPLICATIONS

- Digital microscopy
- Machine vision
- Medical imaging
- Semiconductor equipment
- Test instruments
- Document scanners
- 2D barcode readers
- Web camera and security video

PRODUCT DESCRIPTION

Mightex USB2.0 cameras with frame buffers are optimized for machine-vision applications, and they can be also used for a wide variety of applications (such as industrial inspections, digital microscopy and medical imaging) which require good quality cameras that are easy to use and cost-effective. These cameras have built-in frame buffers, external trigger-in, strobe-out, and a powerful camera engine that supports multiple cameras. Monochrome cameras often exhibit 20% higher spatial resolution than their color counterparts because no pixel interpolation is necessary. Since there is no Bayer color filter on the sensor, monochrome cameras are more sensitive than color sensors, especially in near IR and UV regions. Frame rate can be as high as 15 fps in full resolution and up to 80 fps using ROI mode. A user-friendly GUI based application software and an SDK are provided for custom software development. In addition, a DirectShow driver and a TWAIN driver are available to easily link the cameras with sers' applications. A USB command set protocol and a Linux driver are also provided for non-Windows based applications.

PERFORMANCE SPECIFICATIONS

Parameters	CCN-B013-U	CCE-B013-U	Unit
Board-level / enclosed	Board-level	Enclosed	
Number of GPIOs	4	4	
Resolution	1,392 x 1,040 Monochrome		
Bit	8/12		bits
CCD Chip	1/2" Sony ICX205AL, Global Shutter		
Pixel Size	4.65 x 4.65		µm
Active Imager Size	7.60 x 6.20		mm
Scanning System	Progressive		
Frame Rates* (@28MHz Clock)	15 @1,392 x 1,040 29 @696 x 520 (2 x 2 Bin) 37 @464 x 344 (3 x 3 Bin) 49 @348 x 256 (4 x 4 Bin) 49 @348 x 256 (1:4 Skip)		fps
Sub Resolutions	696 x 520(2 x 2 Bin), 464 x 344 (3 x 3 Bin), 348 x 256 (4 x 4 Bin), 348 x 256 (1:4 Skip)		
Shutter Speed (Exposure time)	0.05 ~ 200,000		ms
Hardware Gains	6 ~ 43		dB
Trigger Mode	With external trigger **		
Trigger Delay	< 25		µs
Strobe Out	Yes		
Lens Mount	C– mount or CS-mount		
Built-in Filters	IR-cut (factory standard), no filter, or IR-pass		
Power Consumption	< 1.8		W
Dimension	89 x 64 x 34 (CS-mount) 89 x 64 x 39 (C-mount)	95 x 70 x 38.5 (CS-mount) 95 x 70 x 43.5 (C-mount)	mm
Weight (excluding lens)	80	150	g

* The actual achievable frame rate depends on exposure time, as well as available resources of PC system.
** Part number of the trigger cable for external trigger : ACC-CAM-DIN8

Mightex Systems, 2343 Brimley Road, Suite 868, Toronto, Ontario M1S 3L6, Canada
Tel: 1-416-840-4991 or 1-925-218-1885, Fax: 1-416-840-6541, Email: sales@mightex.com
www.mightex.com or www.mightexsystems.com

Mightex
Simply Brighter

OPERATION CONDITION

Operating Temperature Range:	0°C ~ 45°C
Storage Temperature Range:	-25°C ~ 85°C
Relative Humidity, Non-condensing:	5% ~ 95%

RECOMMENDED SYSTEM CONFIGURATION

Processor:	Pentium III 900 MHz or better, or a compatible processor
Operating System:	Windows 2000, XP, Vista, Windows 7 and 8
RAM:	256MB or greater
Hard Disk Space:	30MB for software installation, plus additional space for storing captured images
USB2.0 Host Controller:	Intel integrated host controller (recommended)

EXAMPLE OF GRAPHICAL USER INTERFACE

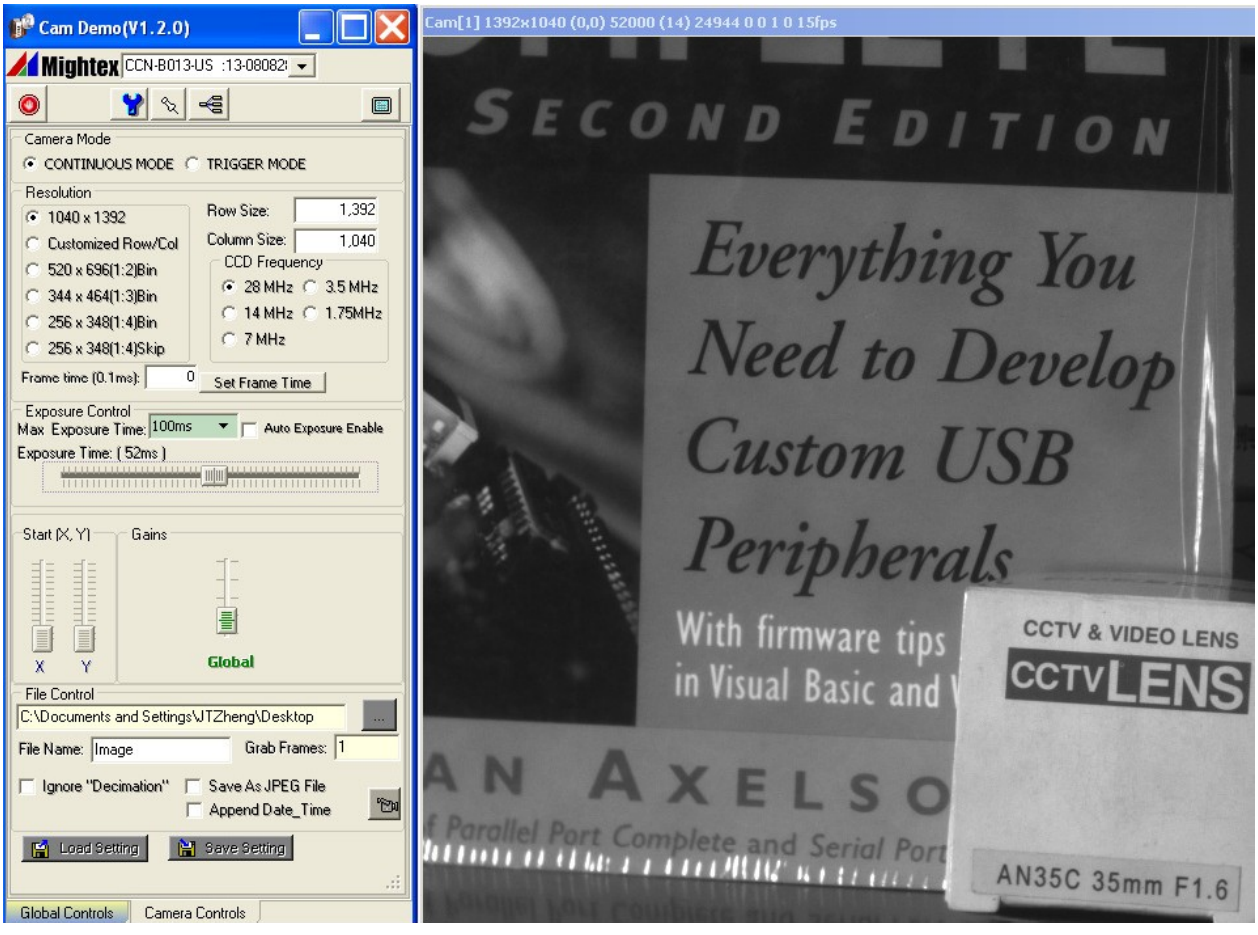

Mightex Systems, 2343 Brimley Road, Suite 868, Toronto, Ontario M1S 3L6, Canada
Tel: 1-416-840-4991 or 1-925-218-1885, Fax: 1-416-840-6541, Email: sales@mightex.com
www.mightex.com or www.mightexsystems.com

Mightex
Simply Brighter

INSTALLATION DRAWINGS

1) Board-level Camera with CS-mount

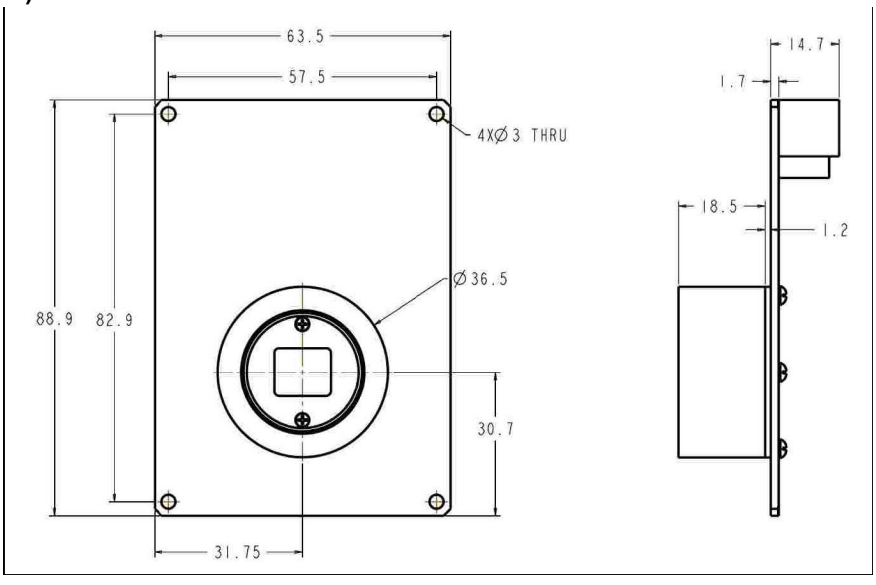

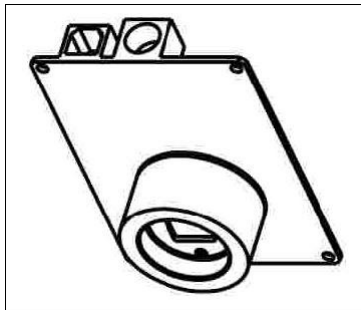

2) Enclosed camera with CS-mount

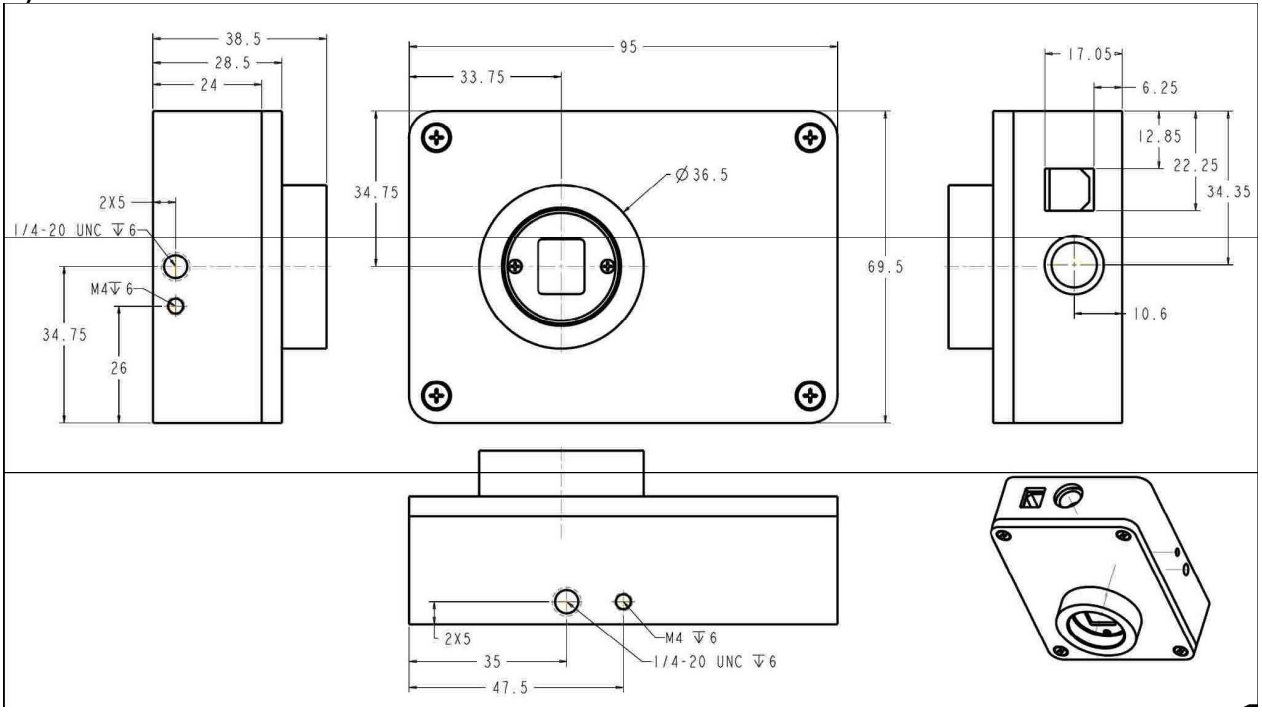

Mightex Systems, 2343 Brimley Road, Suite 868, Toronto, Ontario M1S 3L6, Canada
Tel: 1-416-840-4991 or 1-925-218-1885, Fax: 1-416-840-6541, Email: sales@mightex.com
www.mightex.com or www.mightexsystems.com

WHAT'S IN A C-MOUNT CAMERA?

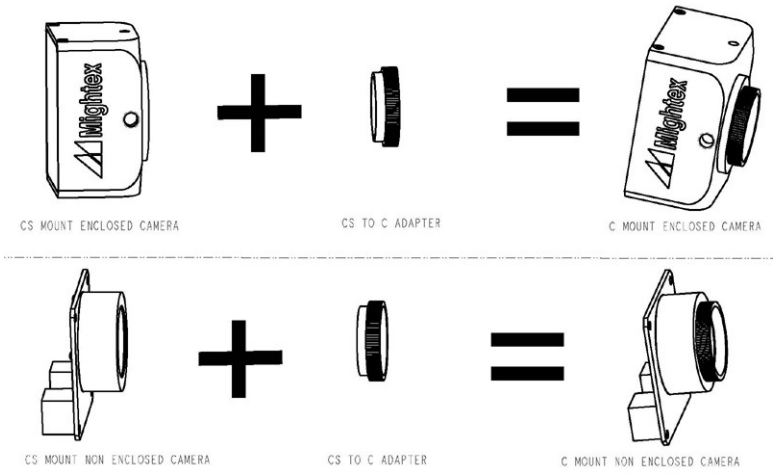

A C-mount camera is composed of a CS-mount camera and a CS-to-C-mount adapter. The latter is essentially a 5mm thick threaded ring.

With a world-class OEM design team, Mightex offers a broad range of customized solutions in order to meet individual customer's unique requirements. Please call 1-416-840 4991 or email sales@mightex.com for details.

PRECISOMETER | **European Distributor of Mightex**

Official Distribution, System Integration & Local Technical Support Partner

European Office & Lab:
Precisometer (Wfront Principle B.V.)
Eisingastraat 9, 2201 DJ Noordwijk, Netherlands

Regional Coverage & Inquiries:
· Direct EUR Quotes & Official EU Warranty
· In-Person Support in Netherlands, Belgium & EU

Explore Products, Request Quotes & Configure Online: https://www.precisometer.com/mightex

Mightex Systems, 2343 Brimley Road, Suite 868, Toronto, Ontario M1S 3L6, Canada
Tel: 1-416-840-4991 or 1-925-218-1885, Fax: 1-416-840-6541, Email: sales@mightex.com
www.mightex.com or www.mightexsystems.com