Buffered USB2.0 Monochrome 1.3MP CCD Cameras

(Part Numbers: CGN-B013-U, CGE-B013-U)

FEATURES

- Built-in frame buffer (24 frames at full resolution)
- Support simultaneous image capturing from multiple cameras
- 4-pin GPIOs
- Higher sensitivity than color cameras, especially in IR
- 1,280 x 960 active pixels
- Ultra compact
- High-speed USB2.0 (480Mb/s)
- Digital output, no need for frame grabber
- Full-featured SDK
- DirectShow and TWAIN driver
- USB command set for non-Windows based applications
- Linux driver available
- External and Software trigger
- Strobe output for external flash
- ROI & pixel skipping/ binning
- No need for external power supply
- OEM versions available

APPLICATIONS

- Digital microscopy
- Machine vision
- Medical imaging
- Semiconductor equipment
- Test instruments
- Document scanners
- 2D barcode readers
- Web camera and security video

PRODUCT DESCRIPTION

Mightex USB2.0 CCD cameras with frame buffers are optimized for machine-vision applications, and they can be also used for a wide variety of applications (such as industrial inspections, digital microscopy and medical imaging) which require good quality cameras that are easy to use and cost-effective. These cameras have built-in frame buffers, external trigger-in, strobe-out, and a powerful camera engine that supports multiple cameras. Monochrome cameras often exhibit 20% higher spatial resolution than their color counterparts because no pixel interpolation is necessary. Since there is no Bayer color filter on the sensor, monochrome cameras are more sensitive than color sensors, especially in ear IR and UV regions. Frame rate can be as high as 20 fps in full resolution and up to 84 fps using ROI mode. A user-friendly GUI based application software and an SDK are provided for custom software development. In addition, a DirectShow driver and a TWAIN driver are available to easily link the cameras with users' applications. A USB command set protocol and a Linux driver are also provided for non-Windows based applications.

PERFORMANCE SPECIFICATIONS

Parameters	CGN-B013-U	CGE-B013-U	Unit
Board-level / enclosed	Board-level	Enclosed	
Number of GPIOs	4	4	
Resolution	1,280 x 960 monochrome		
Bit	8/12		bits
CCD Chip	1/3" Sony ICX445AL, Global Shutter		
Pixel Size	3.75 x 3.75		µm
Active Imager Size	6.26 x 5.01		mm
Scanning System	Progressive		
Frame Rates* (@32MHz Clock)	20 @1,280 x 960 38 @640 x 480 (2 x 2 Bin) 53 @424 x 320 (3 x 3 Bin) 66 @320 x 240 (4 x 4 Bin) 66 @320 x 240 (4 x 4 Bin2)		fps
Sub Resolutions	640 x 480 (2 x 2 Bin), 424 x 320 (3 x 3 Bin), 320 x 240 (4 x 4 Bin), 320 x 240 (1:4 Skip)**		
Shutter Speed (Exposure time)	0.05 ~ 200,000		ms
Hardware Gains	6 ~ 41		dB
Trigger Mode	With external trigger ***		
Trigger Delay	< 25		µs
Strobe Out	Yes		
Lens Mount	C– mount or CS-mount		
Built-in Filters	IR-cut (factory standard), no filter, or IR-pass		
Power Consumption	< 1.8		W
Dimension	40 x 40 x 31 (CS-mount) 40 x 40 x 36 (C-mount)	45 x 45 x 30.5 (CS-mount) 45 x 45 x 35.5 (C-mount)	mm
Weight (excluding lens)	29	115	g

* The actual achievable frame rate depends on exposure time, as well as available resources of PC system.
** For the definition of Bin, Skip and Bin2 please refer to the camera's SDK guide.
*** Part number of the trigger cable for external trigger : ACC-CAM-CON8

Mightex Systems, 2343 Brimley Road, Suite 868, Toronto, Ontario M1S 3L6, Canada
Tel: 1-416-840-4991 or 1-925-218-1885, Fax: 1-416-840-6541, Email: sales@mightex.com
www.mightex.com or www.mightexsystems.com

Mightex
Simply Brighter

OPERATION CONDITION

Operating Temperature Range:	0°C ~ 45°C
Storage Temperature Range:	-25°C ~ 85°C
Relative Humidity, Non-condensing:	5% ~ 95%

RECOMMENDED SYSTEM CONFIGURATION

Processor:	Pentium III 900 MHz or better, or a compatible processor
Operating System:	Windows 2000, XP, Vista, Windows 7 and 8
RAM:	256MB or greater
Hard Disk Space:	30MB for software installation, plus additional space for storing captured images
USB2.0 Host Controller:	Intel integrated host controller (recommended)

EXAMPLE OF GRAPHICAL USER INTERFACE

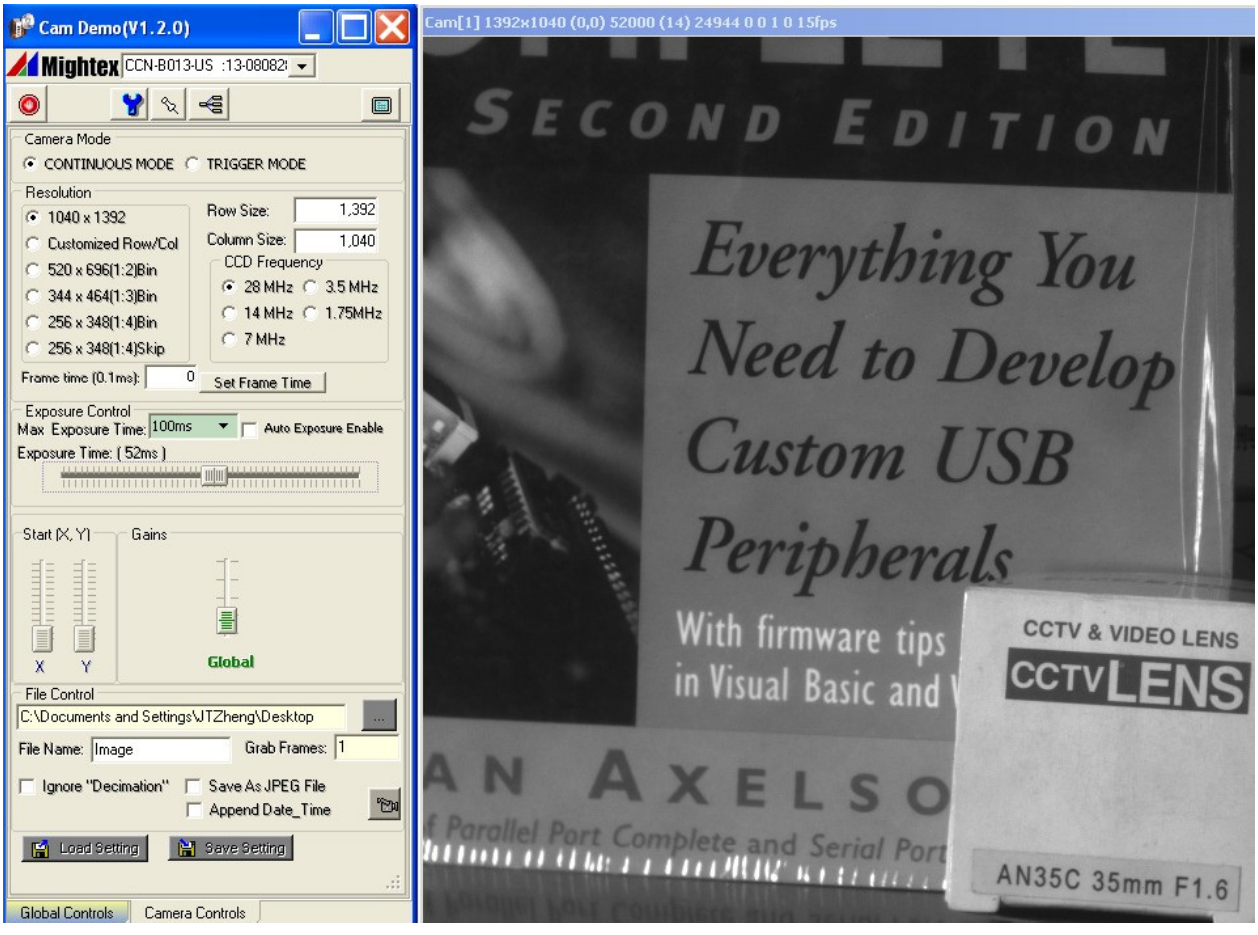

Mightex Systems, 2343 Brimley Road, Suite 868, Toronto, Ontario M1S 3L6, Canada
Tel: 1-416-840-4991 or 1-925-218-1885, Fax: 1-416-840-6541, Email: sales@mightex.com
www.mightex.com or www.mightexsystems.com

Mightex
Simply Brighter

INSTALLATION DRAWINGS

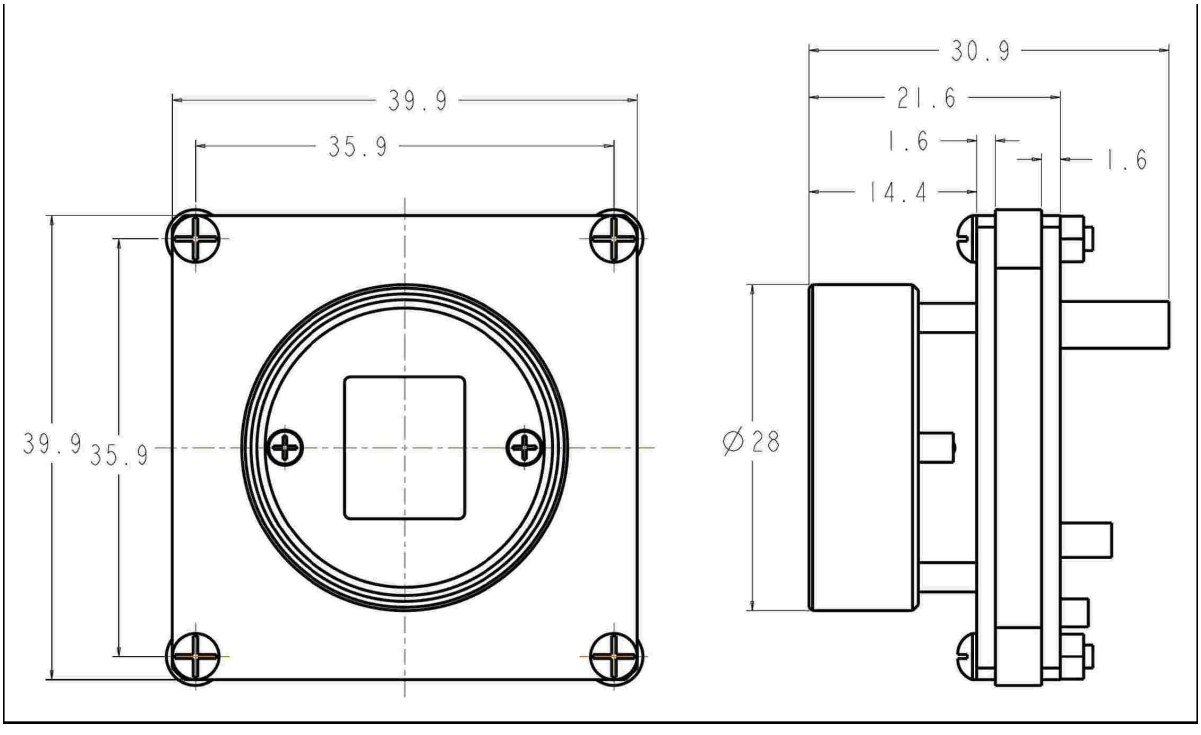

2) Enclosed camera with CS-mount

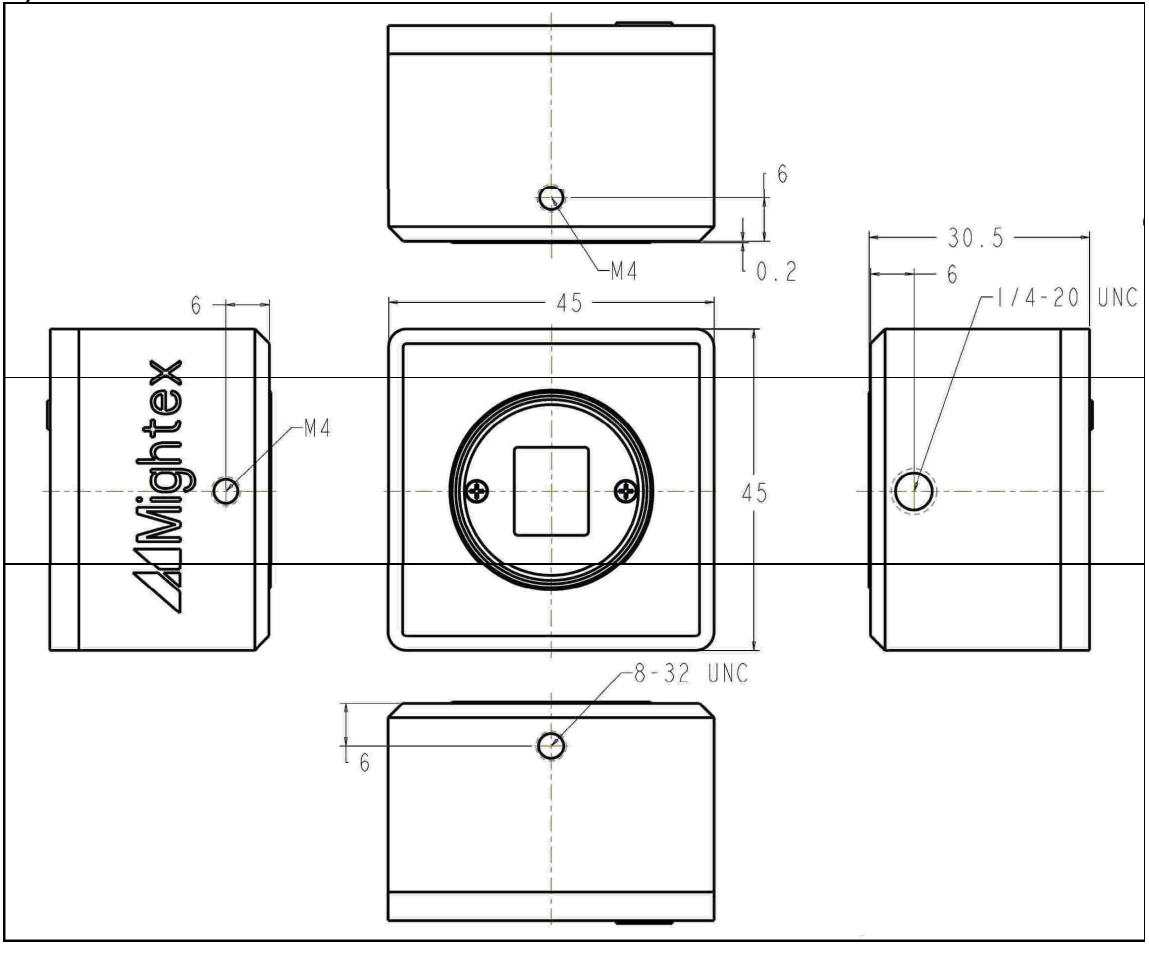

Mightex Systems, 2343 Brimley Road, Suite 868, Toronto, Ontario M1S 3L6, Canada
Tel: 1-416-840-4991 or 1-925-218-1885, Fax: 1-416-840-6541, Email: sales@mightex.com
www.mightex.com or www.mightexsystems.com

WHAT'S IN A C-MOUNT CAMERA?

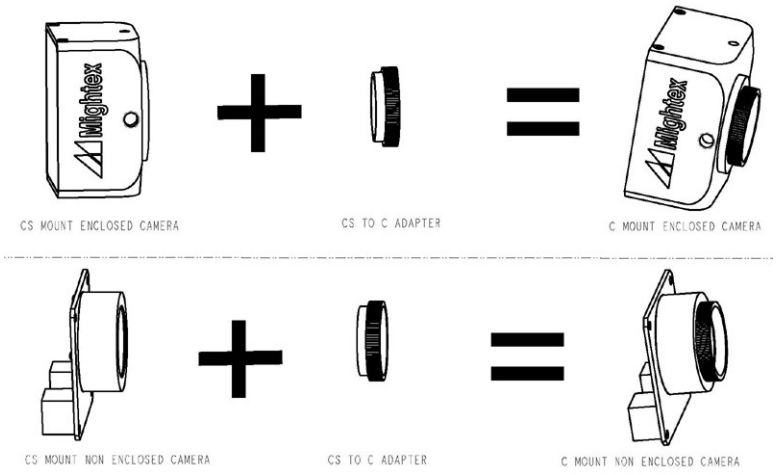

A C-mount camera is composed of a CS-mount camera and a CS-to-C-mount adapter. The latter is essentially a 5mm thick threaded ring.

With a world-class OEM design team, Mightex offers a broad range of customized solutions in order to meet individual customer's unique requirements. Please call 1-416-840 4991 or email sales@mightex.com for details.

PRECISOMETER | **European Distributor of Mightex**

Official Distribution, System Integration & Local Technical Support Partner

European Office & Lab:
Precisometer (Wfront Principle B.V.)
Eisingastraat 9, 2201 DJ Noordwijk, Netherlands

Regional Coverage & Inquiries:
· Direct EUR Quotes & Official EU Warranty
· In-Person Support in Netherlands, Belgium & EU

Explore Products, Request Quotes & Configure Online: https://www.precisometer.com/mightex

Mightex Systems, 2343 Brimley Road, Suite 868, Toronto, Ontario M1S 3L6, Canada
Tel: 1-416-840-4991 or 1-925-218-1885, Fax: 1-416-840-6541, Email: sales@mightex.com
www.mightex.com or www.mightexsystems.com

Mightex
Simply Brighter