SLE-I 730 nm / 500 mW single-channel light engine

A single-channel LED light engine configured for 730 nm at 500 mW. The assembly integrates intensity control, electronics and air cooling; match the published optical delivery and electrical interfaces to your instrument.

Model specifications

Parameter	Specification
Model	SLE-I
Channel count	1
Wavelength	730 nm
Output power	500 mW
Intensity control	0-100% dimming, accuracy of 1%
Rise / fall time (10-90%)	Rising/ Descending Edge (10%-90%) <50 microseconds
Operating Mode	Continuous Output, Default TTL Modulation (Analog Modulation Optional)
Computer control	Support RS232 host computer control
Control Options	SMA - External trigger TTL signal (external trigger analog modulation optional); Serial Interface (RS232) - Light Output ON/OFF and brightness adjusting; Manual control box (optional) - Light Output ON/OFF and brightness adjusting
Optical delivery	3 mm diameter liquid optical waveguide (LLG)
Operating Temperature	10-35°C
Power input	DC12 V
Cooling	Air Cooled
Housing dimensions (reference)	171mmx114mmx100 mm (Reference)
Source warranty term	2 Years

Output and spectral coverage belong to this configuration; they do not describe a continuously tunable source.

Relative emission spectrum

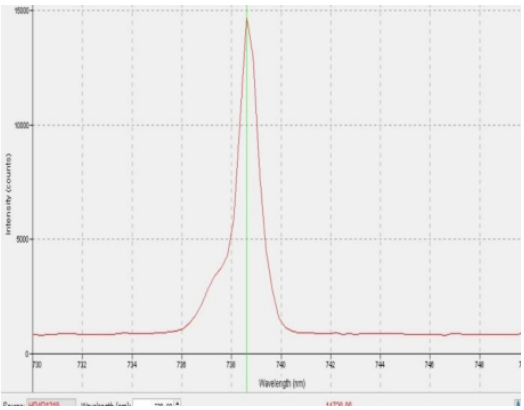

Normalized spectral output; peaks and channel powers are tabulated separately.

Mechanical drawing

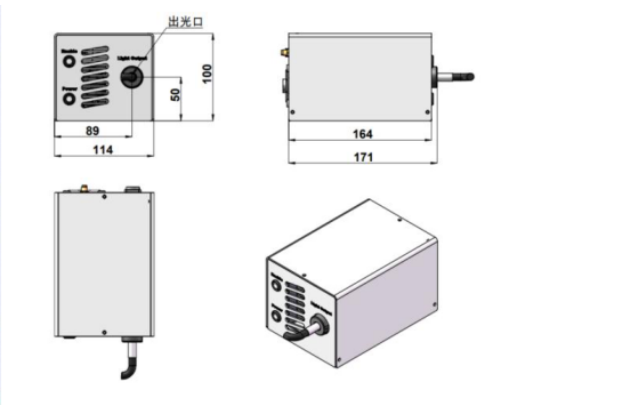

Mechanical outline and interface dimensions in millimeters; use the drawing for mounting.