LED-880-P1 PCB-mounted LED

880 nm nominal LED on a 20 mm hexagonal copper-core PCB. Compare minimum and typical optical power, forward voltage, spectral bandwidth and device-specific thermal limits before selecting the driver and heat sink.

Optical and electrical ratings

Not specified means the source gives no value. Maximum current is a limit, not an instruction to operate every device at that current.

Parameter	Minimum	Typical	Maximum
Peak Wavelength	880 nm	Not specified	890 nm
LED Output Power	438.3 mW	492 mW	Not specified
Forward Voltage	1.4 V	1.8 V	Not specified
Bandwidth (FWHM)	Not specified	39 nm	Not specified
Typical Viewing Angle	Not specified	120 deg	Not specified

Operating limits and carrier

Parameter	Rating
Maximum Current	1000 mA
Operating Temperature	-40 to +85°C
Storage Temperature	-40 to +100°C
Carrier	20 mm hexagonal copper-core PCB
Thermal management	Heat sink required

Emitter package drawing

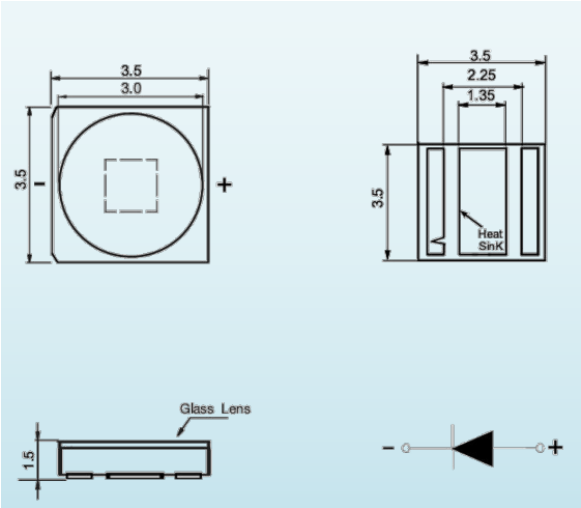

Emitter package geometry and electrical polarity; dimensions in millimeters. The carrier is a separate 20 mm hexagonal PCB.

Relative emission spectrum

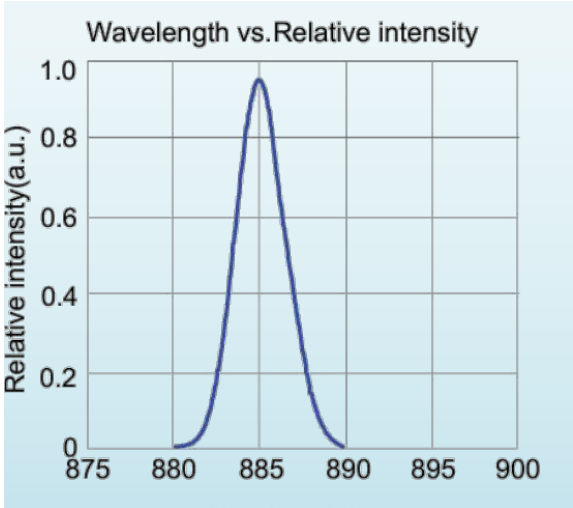

Relative spectral distribution for LED-880-P1; a normalized spectrum, not a calibrated output-power plot.