# LED-325-P1 PCB-mounted LED

325 nm nominal LED on a 20 mm hexagonal copper-core PCB. Compare minimum and typical optical power, forward voltage, spectral bandwidth and device-specific thermal limits before selecting the driver and heat sink.

## Optical and electrical ratings

*Not specified means the source gives no value. Maximum current is a limit, not an instruction to operate every device at that current.*

| Parameter | Minimum | Typical | Maximum |
|---|---|---|---|
| **Peak Wavelength** | 320 nm | Not specified | 330 nm |
| **LED Output Power** | 82.89 mW | 99.15 mW | Not specified |
| **Forward Voltage** | 5 V | 5.5 V | Not specified |
| **Bandwidth (FWHM)** | Not specified | 13 nm | Not specified |
| **Typical Viewing Angle** | Not specified | 120 deg | Not specified |

## Operating limits and carrier

| Parameter | Rating |
|---|---|
| **Maximum Current** | 500 mA |
| **Operating Temperature** | -10 to +55°C |
| **Storage Temperature** | -30 to +85°C |
| **Carrier** | 20 mm hexagonal copper-core PCB |
| **Thermal management** | Heat sink required |

## Emitter package drawing

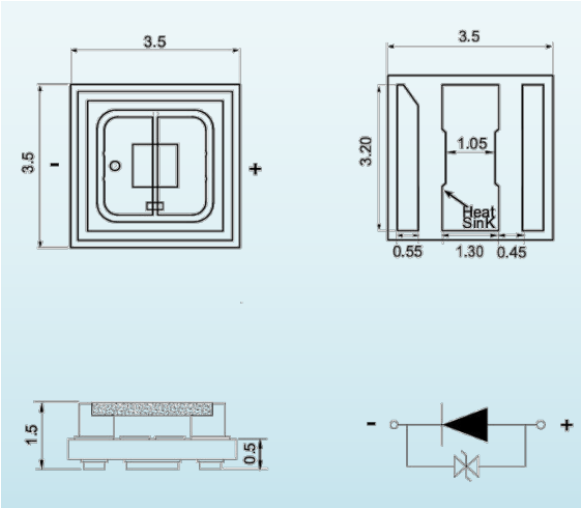


*Emitter package geometry and electrical polarity; dimensions in millimeters. The carrier is a separate 20 mm hexagonal PCB.*

## Relative emission spectrum

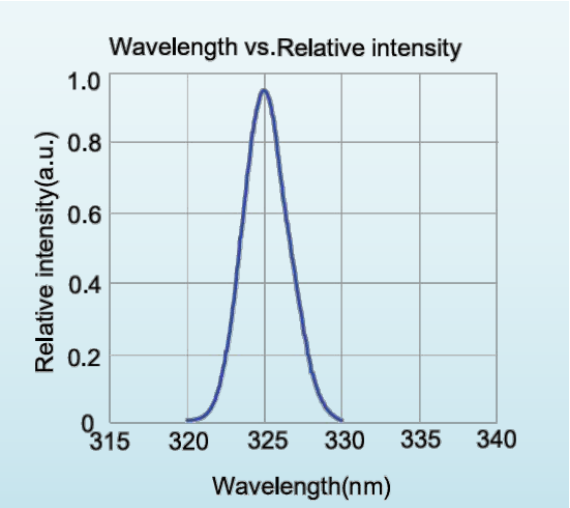


*Relative spectral distribution for LED-325-P1; a normalized spectrum, not a calibrated output-power plot.*