CN0310VIS-XGW

Microfocus series | Beam profiler

CN0310VIS-XGW microfocus series beam profiler. Spectral range: 515 nm-532 nm. Beam-spot range: 5 µm-0.5 mm. Check power, attenuation and interface conditions for the selected configuration.

Model specifications	Specification
Model	CN0310VIS-XGW
Detection Wavelength	515 nm-532 nm
Beam Spot Detection Range	5 µm-0.5 mm
Camera Effective Area	φ5 mm
Magnification	10x
Resolution	0.5 µm
Exposure Time	0.05 ms-500 ms
Maximum Power	2.5 W@minimum focal spot
Lowest Effective Response	0.136µW/cm^2 [1]
Built-in Attenuation	OD0/OD1/OD2/OD3/OD4
Interface	USB3.0
Processing Frame Rate	5-10 fps [2]
External Trigger	Supported
Dimensions	Refer to mechanical drawing
Beam Input Orientation	Vertical/Horizontal
Defocus Range	-1 mm , +1.3 mm
Operating Environment	Temperature<0-35°C [3] , relative humidity<60%
Operational Conditions	Software environment: Windows 10/11, 64 bit, pre installed with MS Office or WPS, Hardware configuration: ≥8GB memory, CPU clock speed ≥2.5G, core ≥4, recommended i5 or above equivalent models, optimal display resolution 1920 * 1080
Weight	<1.5 Kg

CN0310VIS-XGW

Mechanical outline and measurement conditions

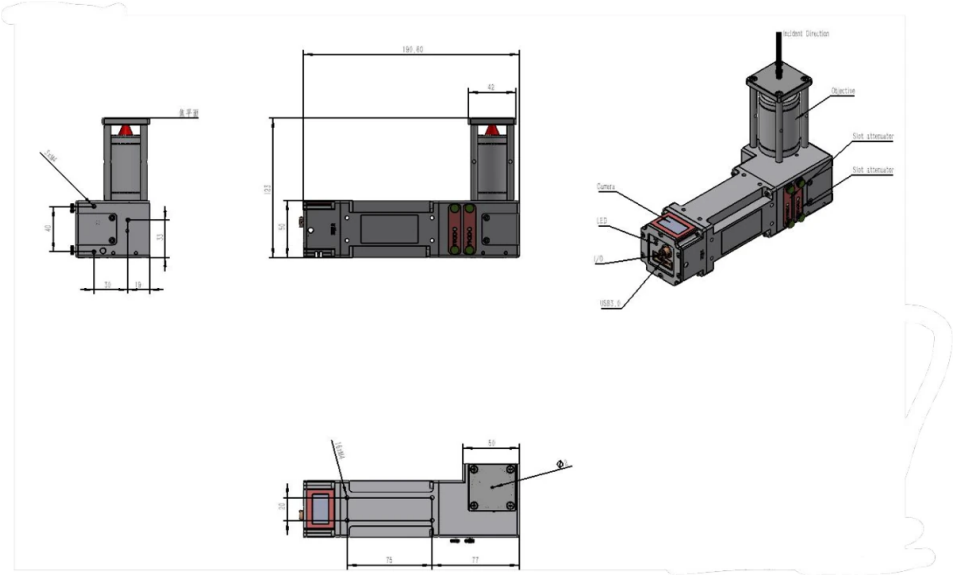

Mechanical outline | Dimensions in mm

Beam-analysis examples

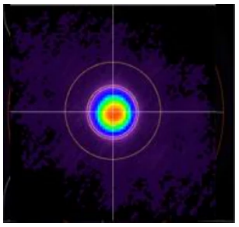

Two-dimensional intensity map

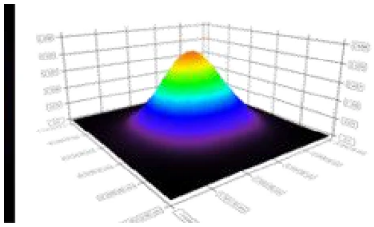

Three-dimensional beam profile

Illustrative software output, not a test result for this unit. Available functions depend on the selected hardware and software.

Measurement conditions and configuration notes

[1] The described parameter indicates the camera's response when the exposure time is set to 100 milliseconds@633 nm. [2] The parameter mentioned is the frame rate at a resolution of 5,000,000 pixels. [3] This is the working temperature, if it involves directivity test, the temperature should be controlled at 15-25°C.

Read total power, power density and pulse-energy-density limits with the specified attenuation, wavelength, spot size, cooling and detection time. A maximum power figure does not apply to every beam configuration.

Precisometer | info@precisometer.com | Product details and enquiry

Specification review: 24 October 2026. Confirm the selected optical, attenuation and cooling configuration with your quotation. Include wavelength, spot size, pulse conditions, power, cooling and required analysis.